Installation Manual for

HORAY PV Module Collection

HORAY

Applicable Module Type

No.	Module Type	Size
1	HSxxxTC-MHG-D (xxx=670-730, in steps of 5, 132 cells)	2384x1303x35/33mm
2	HSxxxTC-MHC-D (xxx=585-640, in steps of 5, 132 cells)	2382x1134x30/35mm
3	HSxxxTC-MHC-D (xxx=535-580, in steps of 5, 120 cells)	2178x1134x30/35mm
4	HSxxxTC-MHC-D (xxx=475-520, in steps of 5, 108 cells)	1960x1134x30/35mm
5	HSxxxTC-MHC-D (xxx=425-465, in steps of 5, 96 cells)	1762x1134x30/35mm
6	HSxxxTC-MHO-D (xxx=560-605, in steps of 5, 144 cells)	2279x1134x35/30mm
7	HSxxxTC-MHO-D (xxx=515-550, in steps of 5, 132 cells)	2094x1134x35/30mm
8	HSxxxTC-MHO-D (xxx=470-500, in steps of 5, 120 cells)	1909x1134x35/30mm
9	HSxxxTC-MHO-D (xxx=420-450, in steps of 5, 108 cells)	1722x1134x35/30mm
10	HSxxxTC-MHG (xxx=670-730, in steps of 5, 132 cells)	2384x1303x35/33mm
11	HSxxxTC-MHO (xxx=560-605, in steps of 5, 144 cells)	2279x1134x35/30mm
12	HSxxxTC-MHO (xxx=515-550, in steps of 5, 132 cells)	2094x1134x35/30mm
13	HSxxxTC-MHO (xxx=470-500, in steps of 5, 120 cells)	1909x1134x35/30mm
14	HSxxxTC-MHO (xxx=420-450, in steps of 5, 108 cells)	1722x1134x35/30mm

CONTENTS

1. Introduction 3
1.1 Rules and regulations 3
1.2 Disclaimer 3
2. General Information 5
3. Unpacking mode 10
3.1 Enclosed unpacking 10
4. Installation conditions 13
4.1 Installation Site and Working Environment 13
4.2 Selection of Tilt Angles 13
5. Mechanical Installation 15
5.1 Regular Requirements 15
5.2 Module Mechanical Installation 16
5.2.1 Bolts Mounting 16
5.3.2 Clamp Mounting 16
5.3 Installation and Mechanical Load of Mono-facial Modules 17
5.4 Installation and Mechanical Load of Bifacial Modules 19
6. Electrical installation 21
6.1 Electrical Performance 21
6.2 Cables and Wiring 21
6.3 Connector 22
6.4 Bypass diode 23
7. Grounding 24
8. Operation and maintenance 25
8.1 Cleaning 25
8.2 Module Appearance Inspection 25
8.3 Inspection of Connectors and Cables 26

1. Introduction

Thanks for choosing HORAY SOLAR photovoltaic (PV) modules.

Electrical and mechanical installation information will be introduced in this installation manual, so please read and understand the information before installing HORAY modules. In addition, this manual also contains important safety information that you should be familiar with. All contents in this manual are intellectual properties of HORAY which originate from long-term technical exploration and experience accumulation of HORAY.

This installation manual does not entail any explicit or implicit quality warranty and does not stipulate compensation schemes for losses, module damages or other costs caused by or related to module installation, operation, utilization and maintenance process. When there is a dispute between the parties about the root-cause of module damage, the judgment is based on the quality standards as per contract.

HORAY will not take any responsibility if patent rights or the third party rights are infringed by use of modules. HORAY reserves the rights to modify the product manual or installation manual without advanced notice. It is recommended to visit our website regularly at www.horaysolar.com for the latest version of this installation manual.

If customers fail to install modules as per requirements set forth in this manual, the limited warranty provided for customers will be invalid. In addition, suggestions in this manual are to improve the safety of module installation, which have been tested and proved through years of experience. Please provide this manual to PV system users for reference and inform the advice on operation, maintenance requirements, etc.

1.1 Rules and regulations

The mechanical and electrical installation of modules must comply with all applicable local regulations and codes, including electrical norms, including construction codes and electrical connection requirements, as well as mounting and other equipment instructions. Regulations may differ based on site-specific conditions, such as building roof installation, vehicle applications, etc. Additionally, requirements may vary depending on the installed system voltage (DC or AC). For specific terms, please contact your local authorities.

1.2 Disclaimer

HORAY reserves the right to change this user manual without prior notice. This user manual is not a warranty document and does not carry any warranty significance. If the components are not operated in accordance with the requirements listed in this manual during the operation process (including but not limited to product disassembly/packaging, loading/unloading, transportation, storage, installation, use, operation, or maintenance), it will result in the invalidation of the product's limited warranty. HORAY is not responsible for any losses caused by improper operations or mistakes by the customer that do not follow

the instructions in this user manual, including but not limited to any product damage, personal injury, or other property loss resulting from failure to follow the instructions in this manual during component operation.

⚠	**Mandatory** Otherwise the product may be damaged or the user's personal safety may be endangered.	⊘	**Prohibited** Otherwise the product may be damaged or the user's personal safety may be endangered.

2. General Information

Two labels on the module contain the information below:

1. Nameplate: product type, rated power, rated current, rated voltage, open circuit voltage, short circuit current under testing conditions, certification indicator, maximum system voltage, etc.

2. Serial Number label: A unique serial number that is laminated inside the module permanently and can be found on the front of the module. There is another same serial number beside the module nameplate.

Front and Back Side Identification: The smooth glass surface without the junction box is the front side of the module. The side equipped with the junction box and the product nameplate is the back side.

2.1 Regular Safety

Handle modules during deliveries and transport with care to avoid large shocks that could damage the assembly or/and cause cracks in the cell.

Do not apply excessive force or objects on the module surface, do not impact, and do not twist the module frame to prevent cell damages and/or cell cracks.

Do not use the modules to replace or partly replace roofs and walls of buildings. Follow your local regulations for building integration of photovoltaic.

Avoid touching or modifying any part of the modules unless explicitly authorized by HORAY. Refrain from removing, attempting to repair, or disassembling any component installed by HORAY.

Junction boxes and female-male connectors interconnections of the modules covered by this manual meet IP68 (IEC 60529) requirements. However, they must be protected from prolonged direct sunlight and water immersions to ensure long-term reliability.

Do not drill holes in the frame without authorization from HORAY, as it may cause corrosion or other negative effects.

Do not lift modules using the attached cables or the junction box.

Prohibit modules, junction boxes and connectors from coming into contact with unapproved chemicals: e.g., petrol, oil, acetone, alcohol, film strippers, potting compounds, TBP, cleaning agents, herbicides, rust inhibitors, descaling agents, etc. For more information, please contact HORAY technical support department.

Do not use junction boxes or connectors that are contaminated (with dust, corrosion, etc.), or broken modules.

Do not stand or step on the module as there is a risk of damage to the modules and injury to the user.

Pay attention to preventing sand, stones or other hard debris kicked up by operation and maintenance vehicles or lawn mowers during operation from striking the surface of the modules, causing glass or module damage.

Use appropriate protective equipment when installing modules to avoid direct contact, reduce the risk of electric shock, and protect hands from sharp edges. This includes standard and insulated safety tools and equipment (safety helmets, insulated gloves and rubber shoes, harnesses or belts, ladders, etc.).

When installing or maintaining the PV system, please do not wear metal rings, watches or other metal products to avoid electric shock dangers or module damage.

Do not use wet tools, and refrain from working in rain, snow or windy conditions.

Modules should be stored at the project site with additional rain protection to avoid direct open-air placement before they are installed.

In order to avoid external matter such as sand or water vapour from entering and causing connection safety problems, once the modules are taken out of the box and installed, the connectors between the modules need to be connected in time, and the connectors need to be kept dry and clean during the installation process. In areas with heavy dust, high salinity, or severe pollution, dust plugs must be installed on the connectors to prevent contamination before the connectors are mated. Prior to purchasing the modules, it is necessary to communicate with HORAY about the project site conditions to ensure the provision of dust plugs. However, please note that the exposure time of dust plugs to the environment should not exceed one month.

2.2 Electrical performance safety

All Horay Solar PV modules comply with the Class II safety classification. All PV modules are suitable for systems accessible to the public that exceed 50V DC or 240W.

Modules generate DC electrical energy when exposed to sunlight or other light sources. Improper contact with live parts, such as terminals, may result in burns, sparks, and lethal shock.

Damage to, or opening of the front or rear glass of the module allows moisture ingress that compromises the internal circuit of the panel, can create serious electrical hazards, including the risk of fire. These modules cannot be repaired and must be removed and replaced immediately.

Electrical specifications shown in data sheets are measured under Standard Test Conditions (STC), thus: irradiance 1000 W/m^2, module cell temperature 25℃, air mass = 1,5. The current and voltage generated by modules in different environments are different from measured at STC. Therefore, when determining the specifications of the rated voltage, cable capacity, fuse capacity, controller capacity, and other output power related specifications, take the values of 1.25 times the short-circuit current and open-circuit voltage

marked on the module. This multiplier serves as a reference and is commonly used, however, it is important to consult with your inverter/controller supplier for system configuration design, as local regulations may vary, impacting these considerations.

Snow, water, or other reflective medium in surrounding environments that intensify light reflection will increase output current and power. And module voltage and power will increase under low temperature condition.

Artificially concentrated sunlight shall not be directed on the module. Do not expose the back of the single glass module directly to sunlight.

To prevent arcs and electrical shocks, do not disconnect modules under load without authorization; if disconnecting the connector is needed, turn off DC and AC inverters or cut off the main switch of the converter first.

PV module operation can only be stopped when they are kept from sunlight or covered by hard board (opaque material) or UV-proof materials.

When connecting a battery storage system, follow the battery manufacturer's instructions for correct installation, operation, and maintenance to ensure system operation and user safety.

Due to the risk of electrical shock, do not perform any work if the terminals of the module are wet.

Do not operate on wet modules, if this is needed, only by wearing PPE.

Please follow the cleaning requirements in this manual when cleaning modules, refer to section 6.2.

Only the modules of the same size and the specifications within the same range can be connected in series.

The number of modules that can be connected at a PV installation shall be determined by a qualified institution or person in accordance with the design specifications of the photovoltaic system and the local electrical design specifications.

Connect the male and female connectors correctly, before connecting, always ensure that the contacts are corrosion free, clean, and dry; check the wiring condition, all wires shall not be detached from the modules, and secure the wires with cable ties so that the wires do not scratch or squeeze the rear side of the module.

Do not touch the module, junction box or the connectors with bare hands during installation or under sunlight, regardless if the module is connected to or disconnected from the system. The glass surface and the frame may be hot, posing a risk of burns and electric shock.

Do not insert any metal object into the connector.

Keep connectors dry and clean, ensuring they are in good operating condition.

2.3 Operation safety

Read and follow the manual "Handling, Storage and Unpacking Instructions" to ensure proper management of the pallets. Custom unpacking methods are prohibited.

Before unpacking, please check the product type, power bins, serial number, and relevant suggestions on the paper of the packaging box.

It is recommended to use art knife or cutter to remove the packing belt and wrapping film. Violent removal is prohibited to avoid scratching the modules in the box.

Ensure a proper environment before unpacking as well as enough man force (2 people minimum) to prevent the module from slipping and hitting other modules, causing scratches, cracks, or deformation on the modules.

Once the modules are removed from the pallet, they shall be promptly installed and connected to the inverter. If they are not installed immediately, protective measures (such as adding rubber joint cover, etc) must be taken on the connectors' head to prevent water vapour, sand, dust, insects, or other contaminants from getting inside the connector and causing poor contact or corrosion of the connector.

When inspecting PV modules with AR coating technology, it will be normal to observe modules with a slight color difference at different angles.

Thermal expansion and contraction effects occur on the modules. During installation, the distance between two adjacent modules must be ⩾10 mm. If there are special requirements, please confirm with HORAY before installation.

During the installation, as for module removal, maintenance, and any other related processes, it is recommended that the force applied between the cable and the connector, and the cable and the junction box, is not more than 60 N.

Meaning of crossed-out wheeled dust bin:

(1) Do not dispose of electrical appliances as unsorted municipal waste, use separate collection facilities. Contact your local government for information regarding the collection systems available.

(2) If electrical appliances are disposed of in landfills or dumps, hazardous substances can leak into the groundwater and get into the food chain, damaging your health and well-being.

(3) When replacing old appliances with new ones, the retailer is legally obligated to take back your old appliance for disposals at least free of charge.

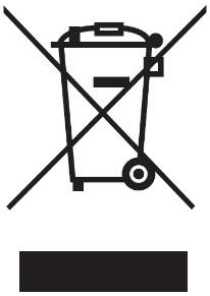

2.4 Fire safety

Please use appropriate module components to comply with local laws and regulations before installation, such as fuses, circuit breakers and grounding connectors, etc.

HORAY modules fire rating is set according to the IEC 61730-2:2023 standard, and it can be found in the corresponding certificates. The fire rating of HORAY mono-facial modules is IEC Class C, the fire rating of HORAY bifacial modules is Class A. The fire Class Rating of a module for roof mounted system shall meet local code requirements in order to achieve the specified System fire Class Rating for a non-BIPV module. All PV systems have limitations of inclination required to maintain a specific System Fire Class Rating.

For roof-top installations, it is responsibility of the designers or installers to ensure that the roof is suitable not only in terms of the structural load-bearing capacity, but also the fire resistance for the installation of the PV modules in accordance to local regulation.

Make sure that the rear side of the module and the mounting surface are fully ventilated. When To facilitate ventilation and heat dissipation of the module, the minimum distance between the lower edge of the module frame and the highest point of the mounting surface must be ⩾ 10 cm. For special installation methods, such as on corrugated metal sheets, the distance between the lower edge of the module frame and the roof shall be determined by the installer according to local regulations. Adequate ventilation must be ensured under local climatic conditions to keep the module within its operating temperature range. For minimum clearance requirements for other special cases, please contact HORAY technical support department.

Different roof structures and installation modes will affect fireproof performance of buildings. Improper installation may lead to the risk of fire.

Do not install the modules anywhere close to open flames or flammable materials (hay, straw, wood, solvents, oils, etc.), or exposed to flammable and explosive gases.

3. Unpacking mode

First, place the packing on the level, dry, and flattened ground, then successively remove the wrapping film, packing strap, upper cover, and carton. If you need to stack the Modules, please place the tray on the level ground and the Modules must keep stacked on the tray; Number of Modules ≤10 pcs, stacking time ≤4 days. The space between two modules must be stuffed with insulating material, and the height of the insulating material must be 15 mm higher than the top of the module (wiring box). Without the isolating material, horizontal stacking is not recommended.

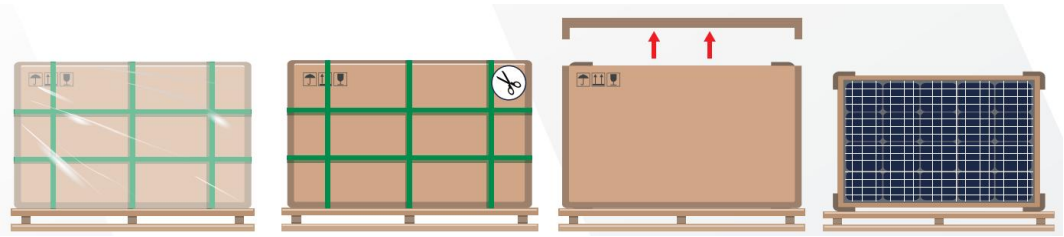

3.1 Enclosed unpacking

Prior to unpacking, please verify and confirm the intactness of the outer packing, and you are advised to remove the packing strap and wrapping film through a utility knife. Do not remove the packing materials with force, so as to avoid damage to the Modules inside.

After unpacking, please verify whether the number of Modules in the packing case and the bar-code information on the frame are the same with the shipping mark information.

Please secure the Modules in a reliably supported or fixed environment, and open the packing of the Modules according to the recommended unpacking procedure.

Based on different product models, the packing mode may be slightly varied. The precautions of unpacking are as follows.

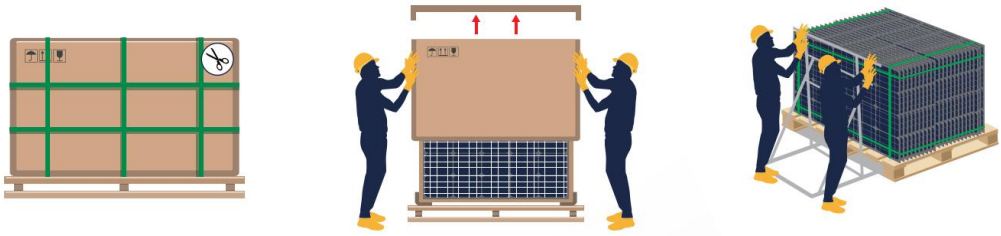

Upon unpacking, the unpacking operation must be performed by 2 or more persons simultaneously. Operators shall wear protective insulating gloves when handling the Modules to avoid injury and prevent leaving fingerprints on the glass surface.

If the Modules are not completely withdrawn after unpacking, then the remaining Modules shall be placed horizontally for further repacking, so as to prevent tilting (upon repacking, the glass face of the lower level of Modules shall be upwards, the glass face of the top level of Modules shall be upwards, and the others downwards). The maximum number of Modules if stacked shall not exceed 16pcs.

If the Modules after unpacking are not subject to immediate installation (due to adverse weather conditions such as strong wind below scale 6, and provided that the number of Modules is less than 12pcs), then safety ropes shall be used to fix the vertical Modules and the leaning posts with protective measures. (As shown in the figure)

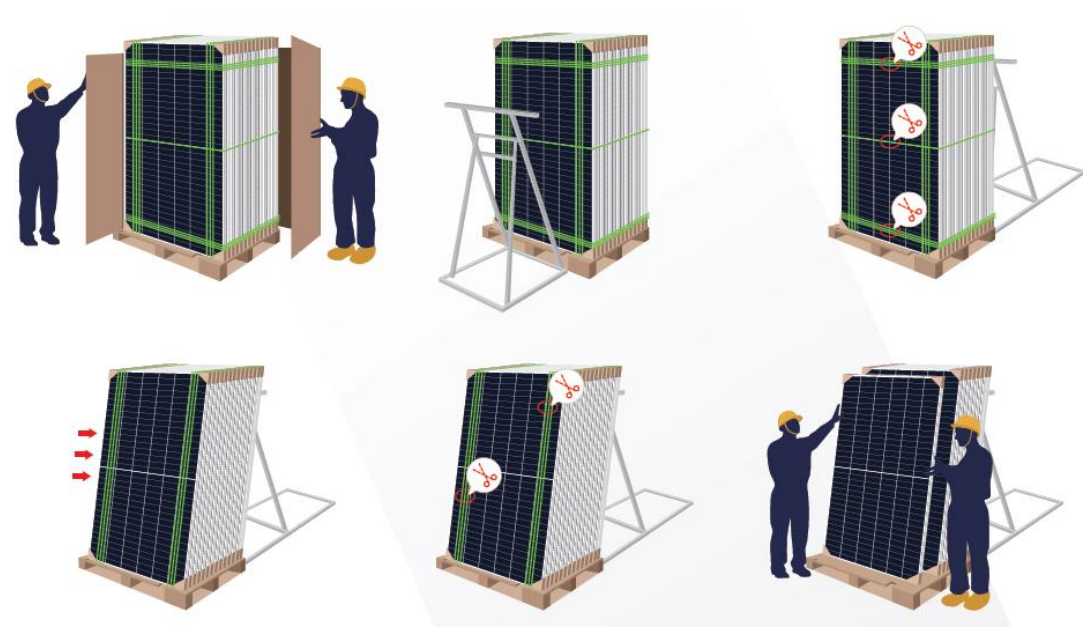

In windy weather conditions, please do not handle the Modules, and properly secure and fix any unpacked Modules.

Do not move the leaning posts during the unpacking process, so as to prevent tilting of the Modules.

Do not carry out outdoor unpacking operations in harsh weather conditions such as rain and snow.

Prior to removing the inner packing straps, please carry out proper protection to prevent tilting of the whole unit of modules.

The operation ground shall be able to ensure that the packing case is steadily placed and tilting is avoided.

Do not lean the Module on the installation post. Do not use wooden strips or other items to directly contact and support the rear side of the module.

Do not handle the Module by a single operator, so as to avoid scratches, deformation or cracks of the Module due to sliding and collision of the Module with other Modules. When lifting the module, do not pull the wiring box or cables to withdraw the module.

Please carry out the operation in strict accordance with the requirements of the unpacking instructions. When removing the packing straps of horizontal packing, please provide protective measures to avoid scratching your face or eyes, and avoid standing on the tray during unpacking, but handle the modules from the two sides of the tray.

4. Installation conditions

4.1 Installation Site and Working Environment

The modules cannot be used in space.

Do not manually focus sunlight with mirrors or magnifying glass onto modules.

HORAY modules shall be installed on appropriate places (such as ground, garage, roof, PV tracking system), but shall not be installed on any vehicles.

Do not install modules at places that are possible to be flooded.

HORAY suggests that modules be installed in the working environment with the temperature of -40℃ to 40℃ of which is the monthly average highest and lowest temperature of the installation sites. The extreme working environment temperature for modules is -40 ℃ to 85 ℃ . The 98th percentile operating temperature(T98) does not exceed 70°C.

Make sure that installed modules do not suffer wind or snow pressure that exceeds the permissible maximum load limit.

Modules shall be installed in places free from shadows throughout the year. Make sure there are no light-blocking obstacles in the installation sites.

Carry out lightning protection for modules installed in places with frequent lightning and thunder.

Do not install modules in places with possible inflammable gases.

Modules cannot be used in environments with too much hails, snows, flue gas, air pollution and soot or in places with strong corrosive substances such as salt, salt mist, saline, active chemical steam, acid rain, or other substances corroding modules, affecting modules' safety or performance.

The standard maximum rated altitude for this PV module is 2000 meters. When installed at an altitude exceeding this standard, the system must be derated to ensure operational safety and stability, as the reduced air density leads to decreased heat dissipation efficiency and weakened electrical insulation strength. For power electronics such as inverters and controllers, a power derating of 1% per 100 meters above 2,000 meters is generally required. For altitudes exceeding 4000 meters, a double derating rate of 2% per 100 meters must be applied.

4.2 Selection of Tilt Angles

Tilt angle of PV modules refer to the included angle between module surface and horizontal ground. The module will obtain the maximum power output when directly facing the sunlight.

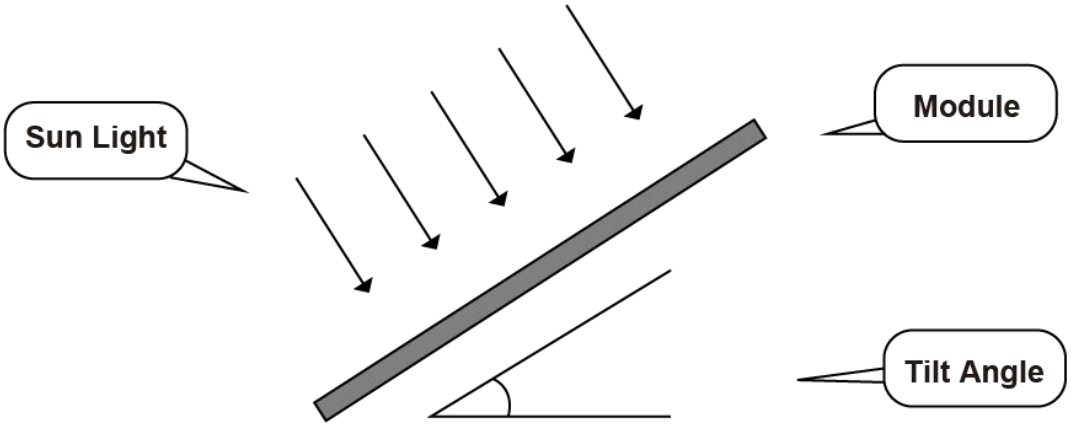

Modules are preferred to be south-facing in the north hemisphere and north-facing in the south hemisphere. Please refer to standard modules installation guideline or suggestions from experienced PV module installer, for the specific installation angle.

HORAY suggests that tilt angle of module installation be no less than 10°, so module surface dust can be washed away easily by rainfall and frequency of cleaning can be reduced. And it is easy for accumulated water to flow away physically and avoid water mark on the glass surface which may further affect module appearance and performance.

HORAY modules connected in string should be installed with the same orientation and tilt angle. Different module orientation and tilt angle may result in different levels of solar irradiation and also power generation. In order to achieve the maximum annual generating capacity, the optimal orientation and inclination of PV modules in the installed area should be selected to ensure that sunlight can still reach to modules even on the shortest day of the year.

If HORAY modules are used in off-grid system, the tilt angle should be calculated based on seasons and irradiation to maximize the output power. If the modules' output power meets the acquired load under the period of the worst irradiation in the year, the modules should be able to meet the load of the whole year. If the HORAY modules are used in grid-connected system, the tilt angle should be calculated based on the principle to maximize the yearly output power.

5. Mechanical Installation

5.1 Regular Requirements

Make sure that installation method and mounting structure are solid enough to meet the expected load-bearing requirements, which is requisite assurance from PV system installer. Installation bracket system shall be tested and inspected by the third party testing institution with static mechanical analysis capacity in accordance with local national standards or international standards.

Mounting structure shall be made from durable, corrosion resistant, UV-proof materials.

Modules shall be fixed on the bracket solidly.

In regions with heavy snowfall in winter, adjust the height of the mounting system so that the lower edge of the modules not covered by snow. Also, in order to reduce the risk of hot spots caused by flying sand and rocks damaging the module and shading, the lowest point of the module should be at a certain height to avoid the module being blocked by weeds and shrubs growing on the ground.

If modules are installed on brackets parallel to the roof , the minimum gap between the module frame and the roof/wall shall be 10cm which is good for air circulation to achieve better performance of module. Make sure the building is suitable for installation before installing modules on roof. Moreover, seal properly to prevent leakage.

The module frames can encounter thermal expansion and cold contraction. So the minimum distance between two adjoining modules shall be no less than 10 mm (0.39 inch). The specific space interval can be calculated according to the actual installation tolerance and deformation of the mounting bracket.

Ensure that the back-sheet, the front and rear glass of the module will not directly touch the mounting bracket, building structure, and environmental foreign objects (such as stones), especially under the action of external force, which will cause damage to the packaging back-sheet and glass, and therefore the product warranty is invalid.

Maximum static load of the PV module is down force 5400 Pa and uplift force 2400 Pa, which can vary from different mounting methods of the modules (please refer to the following installation guidance). The described load in this manual is for the test load.

Note: on the basis of IEC 61215-2016 installation requirements, when computing the corresponding maximum design load, a safety factor of 1.5 need to be considered in compliance with the local laws or regulations. (Test load = design load * 1.5 times safety factor)

The modules can be installed in either landscape or portrait orientation. When installing the modules, be cautious not to block the drain hole of the frame.(* Note: in order for the modules to prevent dust accumulation, the anti-soling modules must be mounted in portrait orientation.)

5.2 Module Mechanical Installation

Module and bracket system connection can be realized by mounting holes, clamps or embedded systems. Installation shall follow the demonstration and suggestions below. If installation mode is different, please consult HORAY customer service personnel and obtain approval. Otherwise, modules may be damaged and limited warranty will be invalid. (* Note, regarding to Anti-Soiling modules only, short edge design has applied on prevention of dust from accumulating on modules, therefore , do not install at the short edge.

For special solar farm application scenarios such as heavy wind loads, valleys and steep cliffs, the installation method needs to be reinforced, and it is recommended to use Oval Washer, Flange nuts, bolts and clamps used together, and other reinforcement installation methods. For specific enquiry, please consult HORAY's customer service.)

Some PV modules has 400/790mm holes spacing are used for matching with the tracking bracket system products. Please do not use for connection with traditional bracket system.

5.2.1 Bolts Mounting

The HORAY module has mounting holes matching M8 bolts. See the following figure for installation details and corresponding hole positions.

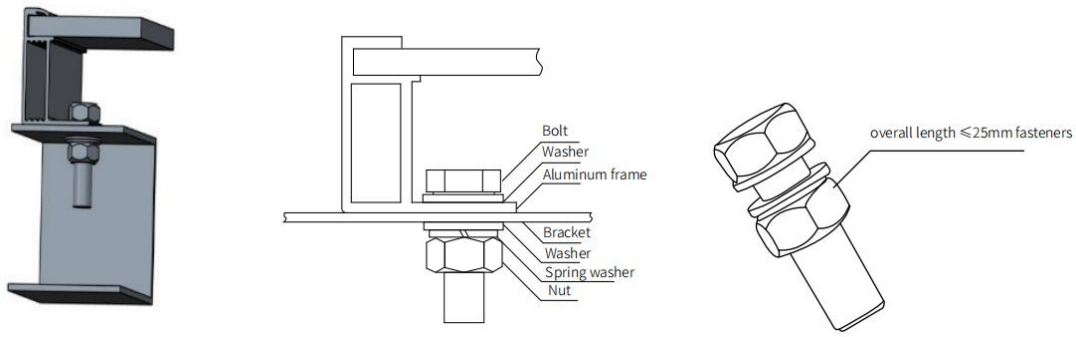

Recommended accessories are as below:

Accessories	Model	Material	Note
Bolt	M8	Q235B/SUS304	Accessories material selection should be based on application environment.
Washer	2pcs, thickness ≥1.5mm and outside diameters = 16mm	Q235B/SUS304	
Spring Washer	8	Q235B/SUS304	
Nut	M8	Q235B/SUS304	

Suggestion : M8 bolt tightening torque range: 12–16 N·m; When using HORAY 30 mm height frame module, it is recommended to select overall length ≤25 mm.

5.3.2 Clamp Mounting

The module can be mounted by a dedicated clamp, as shown in Figure.

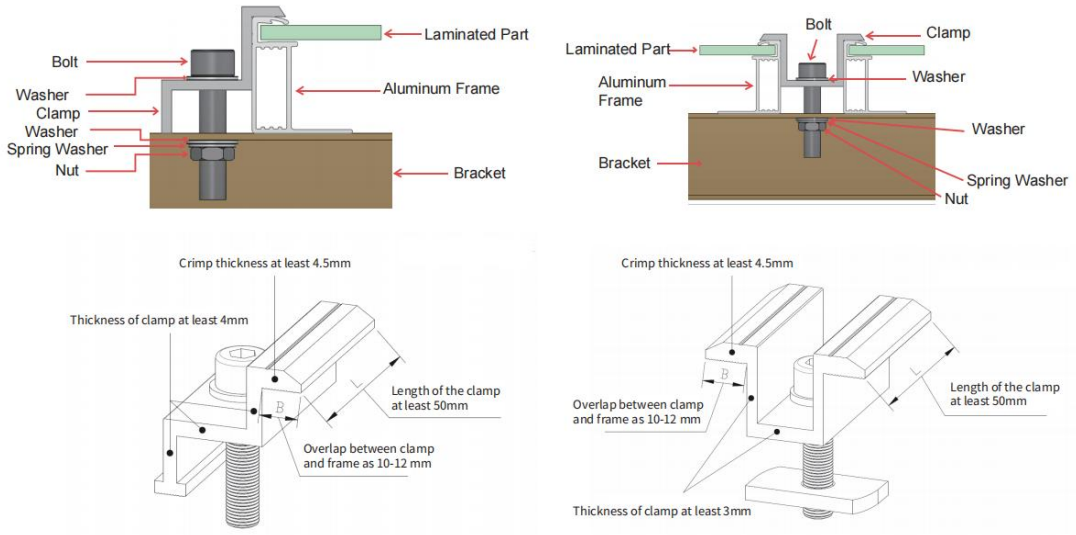

Under no circumstances should the clamp touch the glass or deform the frame. The interface of the clamp to the front of the frame must be smooth and flat to prevent frame or other components from being damaged.

Make sure that these are no shadow caused by clamps. The drain holes of module cannot be blocked by clamps. For framed PV module, it is recommended that the length of the clamp be at least 50 mm, the clamp must maintain an overlap of 10–12 mm with the frame of the module (For clamp installation with an overlap of less than 10 mm, HORAY technicians need to be consulted for assessment).

Regarding to the reference value of tightening torque, it is suggesting that for M8 bolt is 12–16 N·m, M6 is 8 –12 N·m.

5.3 Installation and Mechanical Load of Mono-facial Modules

Our mono-facial modules can be mounted by bolts or clamps. The mounting method and maximum test load are shown as follow. (The unit of distance and length in the table below is millimeter (mm), and the unit of pressure is Pascal (Pa)).

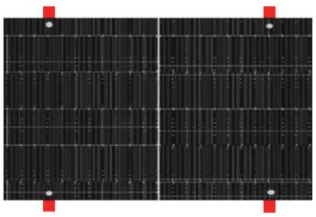 Outer four-hole bolts mounting(Method ①) Mounting rails cross the long frame	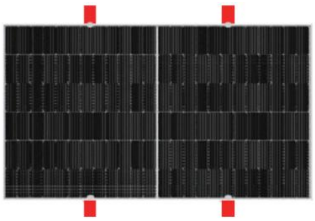 Inner four-hole bolts mounting(Method ②) Mounting rails cross the long frame

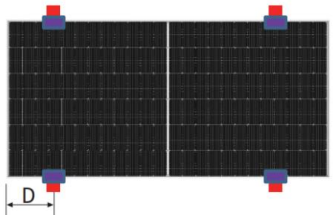

Clamps mounting(Method ③)
Mounting rails cross the long frame

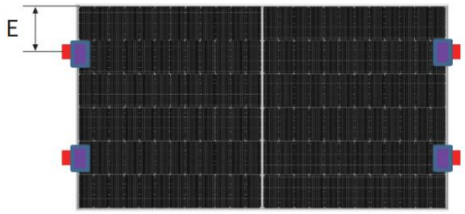

Clamps mounting(Method ④)
Mounting rails cross the short frame

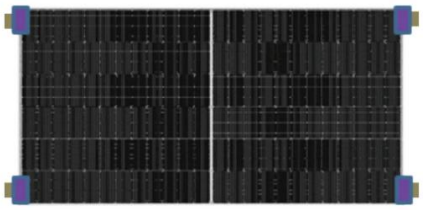

Clamps are mounted at the corners of short frame(Method ⑤)

Mechanical loads information of bolts mounting with framed Mono-facial single glass modules:

Module Type \ Installation Method		Bolts Mounting	
		Mounting rails cross the long frame	
		Outer four-hole	Inner four-hole
		Method ①	Method ②
Framed Mono-facial single glass module	HSxxxTC-MHO (108 Cells)	+2400，-2400	+5400，-2400
	HSxxxTC-MHO (120 Cells)	+2400，-2400	+5400，-2400
	HSxxxTC-MHO (132 Cells)	+5400，-2400	+5400，-2400
	HSxxxTC-MHO (144 Cells)	+5400，-2400	+5400，-2400
	HSxxxTC-MHG (132 Cells)	+5400，-2400	/

Mechanical loads information of clamps mounting with framed Mono-facial single glass modules:

Module Type \ Installation Method		Clamps Mounting				
		Mounting rails cross the long frame			Mounting rails cross the short frame	Clamps are mounted at the corners of short frame
		250≤D≤350	350≤D≤450	500≤D≤600	250≤E≤300	
		Method ③			Method ④	Method ⑤
Framed Mono-facial single glass module	HSxxxTC-MHO (108 Cells)	+5400，-2400	/	/	+2400，-1800	+2400，-1600
	HSxxxTC-MHO (120 Cells)	+5400，-2400	/	/	+2400，-1800	+2400，-1600
	HSxxxTC-MHO (132 Cells)	/	+5400，-2400	/	/	+1600，-1600
	HSxxxTC-MHO (144 Cells)	/	/	+5400，-2400	/	/
	HSxxxTC-MHG (132 Cells)	/	/	+5400，-2400	/	/

NOTE:

1. The "/" indicates an installation method not recommended by HORAY.
2. The mechanical loads in the table are maximum pressures, based on a reference safety factor of 1.5.
3. The above data is based on the static load requirements of the IEC 61215 standard (tested by HORAY or third party certification institution).

5.4 Installation and Mechanical Load of Bifacial Modules

Our bifacial modules can be mounted by bolts or clamps. The mounting method and maximum test load are shown as follow. (The unit of distance and length in the table below is millimeter (mm), and the unit of pressure is Pascal (Pa)).

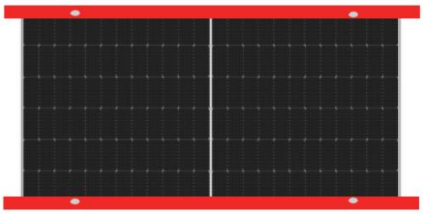 Outer four-hole bolts mounting(Method ①) Mounting rails parallel the long frame	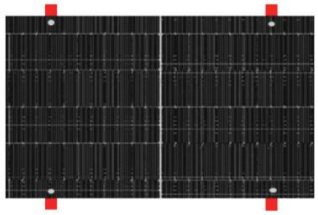 Outer four-hole bolts mounting(Method ②) Mounting rails cross the long frame
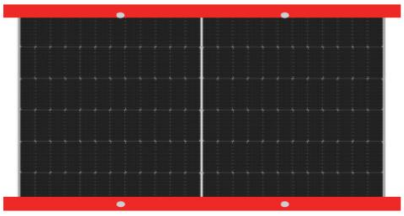 Inner four-hole bolts mounting(Method ③) Mounting rails parallel the long frame	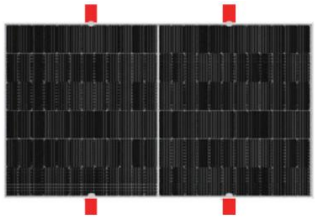 Inner four-hole bolts mounting(Method ④) Mounting rails cross the long frame
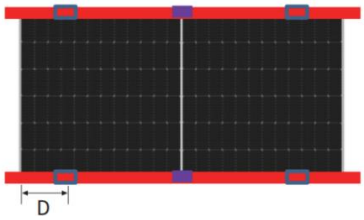 Clamps mounting(Method ⑤) Mounting rails parallel the long frame	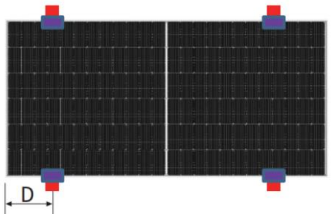 Clamps mounting(Method ⑥) Mounting rails cross the long frame
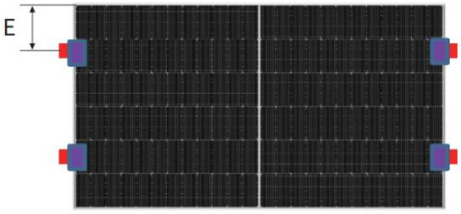 Clamps mounting(Method ⑦) Mounting rails cross the short frame	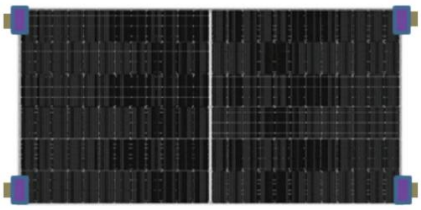 Clamps are mounted at the corners of short frame(Method ⑧)

Mechanical loads information of bolts mounting with framed Bifacial dual glass modules：

Module Type \ Installation Method		Bolts Mounting			
		Mounting rails parallel the long frame		Mounting rails cross the long frame	
		Outer four-hole	Inner four-hole	Outer four-hole	Inner four-hole
		Method ①	Method ③	Method ②	Method ④
Framed Bifacial dual glass module	HSxxxTC-MHO-D (108 Cells)	+2400，-2400	+2400，-2400	+2400，-2400	+5400，-2400
	HSxxxTC-MHO-D (120 Cells)	+2400，-2400	+2400，-2400	+2400，-2400	+5400，-2400
	HSxxxTC-MHO-D (132 Cells)	+2400，-2400	+2400，-2400	+5400，-2400	+5400，-2400
	HSxxxTC-MHO-D (144 Cells)	+2400，-2400	+2400，-2400	+5400，-2400	+5400，-2400
	HSxxxTC-MHC-D (96 Cells)	+2400，-2400	+2400，-2400	+2400，-2400	+5400，-2400
	HSxxxTC-MHC-D (108 Cells)	+2400，-2400	+2400，-2400	+2400，-2400	+5400，-2400
	HSxxxTC-MHC-D (120 Cells)	+2400，-2400	+2400，-2400	+5400，-2400	+5400，-2400
	HSxxxTC-MHC-D (132 Cells)	+2400，-2400	/	+5400，-2400	/
	HSxxxTC-MHG-D (132 Cells)	+2400，-2400	/	+5400，-2400	/

Mechanical loads information of clamps mounting with framed Bifacial dual glass modules：

Module Type \ Installation Method		Clamps Mounting						
		Mounting rails parallel the long frame		Mounting rails cross the long frame			Mounting rails cross the short frame	Clamps are mounted at the corners of short frame
		350≤D≤450	500≤D≤600	250≤D≤350	350≤D≤450	500≤D≤600	250≤E≤300	
		Method ⑤		Method ⑥			Method ⑦	Method ⑧
Framed Bifacial dual glass module	HSxxxTC-MHO-D (108 Cells)	+1600, -1600	/	+5400, -2400	/	/	+2400, -1800	+2400, -1600
	HSxxxTC-MHO-D (120 Cells)	+1600, -1600	/	/	+5400, -2400	/	+2400, -1800	+2400, -1600
	HSxxxTC-MHO-D (132 Cells)	/	+2400, -2400	/	+5400, -2400	/	/	+1600, -1600
	HSxxxTC-MHO-D (144 Cells)	/	+2400, -2400	/	/	+5400, -2400	/	/
	HSxxxTC-MHC-D (96 Cells)	+1600, -1600	/	+5400, -2400	/	/	+2400, -1800	+2400, -1600
	HSxxxTC-MHC-D (108 Cells)	+1600, -1600	/	/	+5400, -2400	/	+2400, -1800	+2400, -1600
	HSxxxTC-MHC-D (120 Cells)	/	+2400, -2400	/	+5400, -2400	/	/	+1600, -1600
	HSxxxTC-MHC-D (132 Cells)	/	+2400, -2400	/	/	+5400, -2400	/	/
	HSxxxTC-MHG-D (132 Cells)	/	+2400, -2400	/	/	+5400, -2400	/	/

NOTE:

1. The "/" indicates an installation method not recommended by HORAY.
2. The mechanical loads in the table are maximum pressures, based on a reference safety factor of 1.5.

3The above data is based on the static load requirements of the IEC 61215 standard (tested by HORAY or third party certification institution).

6. Electrical installation

6.1 Electrical Performance

There are tolerances between the rated values of the electrical performance under STC and measured values. Including Isc, Voc and Pmax under STC (1000 W/m^2 Irradiance, a cell temperature of 25℃ and an AM 1.5).

When modules are in series connection, the string voltage is sum of every individual module in one string. When modules are in parallel connection, the current is sum of the individual module as shown in below figure. Modules with different electric performance models cannot be connected in the same string.

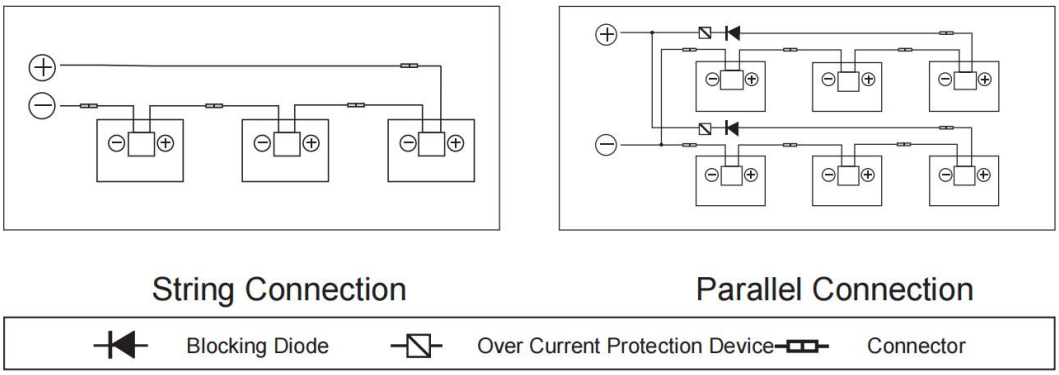

The maximum allowed quantity of modules in string connection shall be calculated according to relative regulations. The open circuit voltage value under the expected lowest temperature shall not exceed the maximum system voltage value allowed by modules and other values required by DC electric parts. (HORAY modules' maximum system voltage is DC1000V/DC 1500V, actually system voltage is designed based on the selected module and inverter model.)

The correction value of VOC can be calculated by the following formula: $C_{VOC}=1-\beta_{Voc}x(25-T)$. T: The expected lowest temperature of the installation site. β: VOC temperature coefficient (% /℃) (Refer to module data sheet for further detail).

If there has reverse current exceeding the maximum fuse current flowing through the module, use over current protection device with the same specifications to protect the module. If quantity of parallel connection is more than 2, there must be an over current protection device on each string of module.

6.2 Cables and Wiring

PV Module's junction boxes with the IP67 protective level, can provide the safety protection for cable and wiring connection, also for contact protection of non-insulating electric parts. Each module has two individual wires connecting the junction box, one is negative pole and the other is positive pole. Two modules can be in series connection by inserting the positive pole at one end of wire of one module into

the negative pole of the adjoining module.

According to local fire protection, building and electrical regulation, apply proper cable and connector, ensure the electrical and mechanical property of the cables (the cables should be put in a catheter with anti-UV aging properties, and if exposed to air, the cable itself should have anti-UV aging capability). For rooftop projects, it is important to utilize support and fixation measures to prevent module cables from hanging on the ground or the rooftop, ensuring the safety and durability of the cables.

The installer can only use single-wire cable, ⩾4mm^2 (12 AWG), 90 ℃ , with proper insulation capability to withstand the maximum open circuit voltage (such as EN50618 approval). Need to select appropriate wire specifications to reduce voltage drop.

HORAY requires that all wiring and electrical connections comply with the appropriate National Electrical Codes.

When cables are fixed on the bracket, avoid mechanical damaging cables or modules. Do not press cables by force. Adopt UV resistant cable ties and clamps to fix cables on the bracket. Though cables are UV resistant and water proof, it is still necessary to prevent cables from direct sun light and water immersion.

The minimum allowed bending radius of cables should be 43 mm. (1.69 inch)

6.3 Connector

Please keep connectors clean and dry. Make sure connector caps are fastened before connection.

Avoid foreign objects such as moisture, dust, and organisms from entering the connector, which may cause the connector to fail to work properly or be damaged.

If the connector is wet, it is forbidden to connect.

If the connector is contaminated, it is forbidden to connect it.

If the connector is not connected positive with negative, the connector is not waterproof.

The components need to be connected as soon as possible after installation, and the connectors should meet the requirements of IP68 (IEC 60529) after the connection. If the connector cannot be connected on time or the installation place is rainy and foggy, it is recommended to add a connector protection device.

Avoid connectors from direct sun light and water immersion. Avoid connectors falling onto ground or roof. incorrect connection may lead to electric arc and electric shock. Please make sure that all electric connection is reliable. Make sure all connectors are fully locked.

Do not connect different connectors (brand and model) together.

6.4 Bypass diode

HORAY module junction box contains bypass diode which is in parallel connection with the cell string. If hot spot occurred, the diode will come into operation to stop the main current from flowing through the hot spot cells in order to prevent module over-heated and performance loss. Note, a bypass diode is not the over current protection device.

If the diode is definite or suspected to be defective, the installer or system maintenance supplier shall contact HORAY. Please do not try to open the module junction box on your own.

7. Grounding

In design of modules, the anodized corrosion resistant aluminum alloy frame is applied for rigidity support. For safety consideration and to protect modules from lightning and electrostatic damage, the module frame must be grounded. The grounding device must be in full contact with inner side of the aluminum alloy and penetrate surface oxide film of the frame.

Do not drill additional grounding holes on module frame.

The grounding conductor or wire may be copper, copper alloy, or any other material acceptable for application as an electrical conductor per respective National Electrical Codes. The grounding conductor must then make a connection to ground with a suitable ground electrode.

There are grounding holes with the diameter of Φ4.2 mm at the edge location of module's back-side frame. The grounding hole on the frame is marked with typical grounding symbol (⏚) according to IEC 61730-1 standard, which can only be used for grounding, not for module installation.

Grounding between modules shall be confirmed by qualified electricians and grounding devices shall be manufactured by qualified electric manufacturer. The copper core wire used for the grounding clamp is recommended to be 12 AWG. And copper wires cannot be pressed during installation in case of damaging.

The following is one of the recommended grounding methods of HORAY modules:

Align grounding clamp to the frame mounting hole. Use grounding bolt to go through the grounding clamp and frame.

Put the tooth side of the washer on the other side and fasten the nuts.

Put grounding wires through the grounding clamp and grounding wire material and dimension shall meet requirements in local national and regional law and regulations.

Fasten bolts of grounding wires and then installation is completed.

Mounting holes on modules that are not occupied can be used for installing grounding devices.

The third party grounding device can be used for grounding of HORAY modules but such grounding method shall be proved to be reliable. Grounding device shall be operated in line with stipulations of the manufacturer.

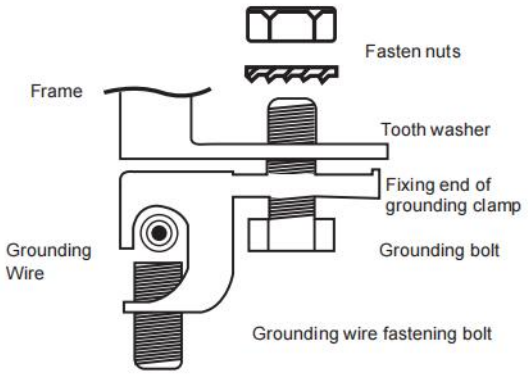

8. Operation and maintenance

It is the users' responsibility to carry out regular inspection and maintenance for modules, especially during the period of limited warranty. To inform the HORAY customer service personnel within two weeks when modules are found broken or other significant abnormality.

8.1 Cleaning

Accumulated contaminants on module surface glass will reduce the power output and lead to local hot spot, such as dust, industrial wasted water and birds' droppings. The severity of influence is determined by transparency of wastes. Small amounts of dust will affect the intensity and evenness of received solar irradiation but are not dangerous and power will not be reduced remarkably generally.

During operation of modules, there shall be no environmental factors to shade modules fully or partially. These environment factors including other modules, module mounting system, birds dwelling, dust, soil or plants. These will significantly reduce output power. HORAY suggests that the module surface should not be shadowed in any case.

Frequency of cleaning depends on dirt accumulation speed. In normal situations, rainwater will clean the module surface and reduce the cleaning frequency. It is suggested to use sponge dipped with clean water or soft cloth to wipe the glass surface. Do not use acid and alkaline detergents to clean modules. Do not use tool with rough surface to clean in any case.

In order to avoid potential risk of electrical shock or burn, HORAY suggests cleaning the modules during early morning or evening with low irradiance and low modules temperature especially for the hot regions.

In order to avoid potential risk of electrical shock, do not try to clean the modules with glass damage or expose wires.

8.2 Module Appearance Inspection

Check module cosmetic defects with naked eyes , especially:

Module glass cracks. Special attention: avoiding rolling up sand and gravel to break the glass during the inspection of the operation and maintenance vehicles; avoiding defects or breakage of glass caused by splashing of hard objects such as sand and gravel when using a lawn mower for weeding operations.

Corrosion at welding parts of the cell main grid (caused by moisture into the module due to damage of sealing materials during installation or transportation).

Check whether there are traces of burning mark on the module back sheet.

Check PV modules if any signs of aging including rodent damage, climate aging, connectors tightness,

corrosion and grounding condition.

Check if any sharp objects in contact with PV modules' surface.

Check if any obstacles shading the PV modules.

Check if any loose or damage screws between the modules and mounting system. If so, adjust and fix in time.

8.3 Inspection of Connectors and Cables

It is suggested to carry out the following preventive inspection twice a year:

Check the tightness of the connectors and cables.

Check if any crack or gap of silicone nearby the junction box.