SUN2000-(50KTL-ZHM3, 50KTL-M3, 50KTL-BRM3)

User Manual

Issue	22
Date	2026-03-30

HUAWEI TECHNOLOGIES CO., LTD.

Copyright © Huawei Technologies Co., Ltd. 2026. All rights reserved.

No part of this document may be reproduced or transmitted in any form or by any means without prior written consent of Huawei Technologies Co., Ltd.

Trademarks and Permissions

HUAWEI and other Huawei trademarks are trademarks of Huawei Technologies Co., Ltd.
All other trademarks and trade names mentioned in this document are the property of their respective holders.

Notice

The purchased products, services and features are stipulated by the contract made between Huawei and the customer. All or part of the products, services and features described in this document may not be within the purchase scope or the usage scope. Unless otherwise specified in the contract, all statements, information, and recommendations in this document are provided "AS IS" without warranties, guarantees or representations of any kind, either express or implied.

The information in this document is subject to change without notice. Every effort has been made in the preparation of this document to ensure accuracy of the contents, but all statements, information, and recommendations in this document do not constitute a warranty of any kind, express or implied.

Huawei Technologies Co., Ltd.

Address: Huawei Industrial Base
Bantian, Longgang
Shenzhen 518129
People's Republic of China

Website: https://e.huawei.com

Security Declaration

Product Lifecycle

Huawei's regulations on product lifecycle are subject to the *Product End of Life Policy.* For details about this policy, visit the following web page:
https://support.huawei.com/ecolumnsweb/en/warranty-policy

Vulnerability

Huawei's regulations on product vulnerability management are subject to the *Vul. Response Process.* For details about this process, visit the following web page:
https://www.huawei.com/en/psirt/vul-response-process
For vulnerability information, enterprise customers can visit the following web page:
https://securitybulletin.huawei.com/enterprise/en/security-advisory

Initial Digital Certificate

The Initial digital certificates on Huawei devices are subject to the *Rights and Responsibilities of Initial Digital Certificates on Huawei Devices.* For details about this document, visit the following web page:
https://support.huawei.com/enterprise/en/bulletins-service/ENEWS2000015789

Huawei Enterprise End User License Agreement

This agreement is the end user license agreement between you (an individual, company, or any other entity) and Huawei for the use of the Huawei Software. Your use of the Huawei Software will be deemed as your acceptance of the terms mentioned in this agreement. For details about this agreement, visit the following web page:
https://e.huawei.com/en/about/eula

Lifecycle of Product Documentation

Huawei after-sales user documentation is subject to the *Product Documentation Lifecycle Policy.* For details about this policy, visit the following web page:
https://support.huawei.com/enterprise/en/bulletins-website/ENEWS2000017761

About This Document

Purpose

This document describes the following inverter models (also referred to as SUN2000) in terms of the safety precautions, product introduction, installation, electrical connections, power-on and commissioning, maintenance, and technical specifications. Read this document carefully before installing and operating the inverter.

- SUN2000-50KTL-ZHM3
- SUN2000-50KTL-M3
- SUN2000-50KTL-BRM3

Intended Audience

This document is intended for:

- Installers
- Users

Symbol Conventions

The symbols that may be found in this document are defined as follows.

Symbol	Description
DANGER	Indicates a hazard with a high level of risk which, if not avoided, will result in death or serious injury.
WARNING	Indicates a hazard with a medium level of risk which, if not avoided, could result in death or serious injury.
CAUTION	Indicates a hazard with a low level of risk which, if not avoided, could result in minor or moderate injury.

Copyright © Huawei Technologies Co., Ltd.

Symbol	Description
NOTICE	Indicates a potentially hazardous situation which, if not avoided, could result in equipment damage, data loss, performance deterioration, or unanticipated results. NOTICE is used to address practices not related to personal injury.
NOTE	Supplements the important information in the main text. NOTE is used to address information not related to personal injury, equipment damage, and environment deterioration.

Change History

Changes between document issues are cumulative. The latest document issue contains all the changes made in earlier issues.

Issue 22 (2026-03-30)

Added **6.3 Creating a Plant**.

Deleted 7 "Human-Machine Interaction."

Updated **9 Technical Specifications**.

Updated **G AFCI**.

Updated **J Smart I-V Curve Diagnosis**.

Updated **L Connecting to a Device on the App (the Device Supports WLAN)**.

Issue 21 (2025-11-28)

Updated **A Grid Codes**.

Updated **E Setting Dry Contact Scheduling**.

Issue 20 (2025-11-20)

Updated **5.2 Preparing Cables**.

Issue 19 (2025-09-30)

Updated **5.2 Preparing Cables**.

Updated **5.4 Connecting an AC Output Power Cable**.

Updated **5.7.1 Communication Mode Description**.

Updated the content about SmartLogger networking.

Updated **9 Technical Specifications**.

 Copyright © Huawei Technologies Co., Ltd.

Issue 18 (2025-08-22)

Added **5.5.2 Measuring the Insulation Resistance of PV Strings to the Ground**.

Updated **5.4 Connecting an AC Output Power Cable**.

Updated **5.5 Connecting DC Input Power Cables**.

Updated **5.7 Connecting Signal Cables**.

Updated **H Rapid Shutdown**.

Updated **F Setting RCD Parameters**.

Updated **I NS Protection**.

Issue 17 (2025-07-15)

Updated **5.5 Connecting DC Input Power Cables**.

Issue 16 (2025-03-10)

Updated **A Grid Codes**.

Issue 15 (2025-01-21)

Updated **2.3 Label Description**.

Issue 14 (2024-12-17)

Updated **A Grid Codes**.

Issue 13 (2024-08-20)

Updated **About This Document**.

Updated **1.2 Electrical Safety**.

Updated **2.1 Product Introduction**.

Updated **2.3 Label Description**.

Updated **3 Inverter Storage**.

Updated **4.3 Determining the Installation Position**.

Updated **9 Technical Specifications**.

Updated **E Setting Dry Contact Scheduling**.

Updated **F Setting RCD Parameters**.

Issue 12 (2024-03-10)

Updated **A Grid Codes**.

Issue 11 (2024-02-02)

Updated **9 Technical Specifications**.

 Copyright © Huawei Technologies Co., Ltd.

Issue 10 (2024-01-12)

Updated **2.2 Appearance**.

Updated **3 Inverter Storage**.

Updated **4.4 Moving the Inverter**.

Updated **7.3 Alarm Reference**.

Updated **9 Technical Specifications**.

Updated **A Grid Codes**.

Issue 09 (2023-11-20)

Updated **4.3 Determining the Installation Position**.

Updated **5.1 Precautions**.

Updated **5.5 Connecting DC Input Power Cables**.

Updated **9 Technical Specifications**.

Issue 08 (2023-10-17)

Updated **4.3 Determining the Installation Position**.

Updated **7.3 Alarm Reference**.

Added **M Contact Information**.

Added **N Digital Power Customer Service**.

Issue 07 (2023-09-14)

Updated **5.5 Connecting DC Input Power Cables**.

Issue 06 (2023-08-25)

Updated **4.3 Determining the Installation Position**.

Updated **7.2 Routine Maintenance**.

Updated **9 Technical Specifications**.

Issue 05 (2023-02-28)

Updated **2.1 Product Introduction**.

Updated **5.2 Preparing Cables**.

Updated **7.3 Alarm Reference**.

Updated **9 Technical Specifications**.

Issue 04 (2023-01-10)

Updated **1 Safety Information**.

Updated **4.2 Tools**.

Updated **5.2 Preparing Cables**.

Added **5.7.5 (Optional) Connecting the Rapid Shutdown Signal Cable**.

Updated **6.4.1 Grid-tied Point Control**.

Updated **F Setting RCD Parameters**.

Added **K Locating Insulation Resistance Faults**.

Issue 03 (2022-08-30)

Added the SUN2000-50KTL-M3 model.

Updated **2.1 Product Introduction**.

Updated **9 Technical Specifications**.

Updated **A Grid Codes**.

Added **F Setting RCD Parameters**.

Added **I NS Protection**.

Issue 02 (2022-08-12)

Updated **5.2 Preparing Cables**.

Updated **5.4 Connecting an AC Output Power Cable**.

Updated **5.5 Connecting DC Input Power Cables**.

Updated **9 Technical Specifications**.

Issue 01 (2022-05-20)

This issue is the first official release.

 Copyright © Huawei Technologies Co., Ltd.

Contents

About This Document iii

1 Safety Information 1

1.1 Personal Safety 2
1.2 Electrical Safety 4
1.3 Environment Requirements 7
1.4 Mechanical Safety 9

2 Overview 13

2.1 Product Introduction 13
2.2 Appearance 15
2.3 Label Description 16
2.4 Working Principles 18
2.4.1 Circuit Diagram 18
2.4.2 Working Modes 19

3 Inverter Storage 21

4 Installation 23

4.1 Checking Before Installation 23
4.2 Tools 24
4.3 Determining the Installation Position 25
4.4 Moving the Inverter 31
4.5 Installing the Mounting Bracket 32
4.5.1 Support Mounting 33
4.5.2 Wall Mounting 33
4.6 Installing the Inverter 35

5 Electrical Connections 37

5.1 Precautions 37
5.2 Preparing Cables 38
5.3 Connecting a PE Cable 41
5.4 Connecting an AC Output Power Cable 42
5.5 Connecting DC Input Power Cables 49
5.5.1 Cable Connection Description 50
5.5.2 Measuring the Insulation Resistance of PV Strings to the Ground 52

 Copyright © Huawei Technologies Co., Ltd.

5.5.2.1 Optimizers Configured 52
5.5.2.2 Optimizers Not Configured 55
5.5.3 Connecting Cables to Amphenol Helios H4 Terminals 57
5.6 (Optional) Installing the Smart Dongle 59
5.7 Connecting Signal Cables 62
5.7.1 Communication Mode Description 64
5.7.2 (Optional) Connecting the RS485 Communications Cables to the Inverter 66
5.7.3 (Optional) Connecting the RS485 Communications Cable to the Power Meter 67
5.7.4 (Optional) Connecting the Power Grid Scheduling Signal Cable 68
5.7.5 (Optional) Connecting the Rapid Shutdown Signal Cable 69

6 Commissioning 71
6.1 Checking Before Power-On 71
6.2 System Power-On 72
6.3 Creating a Plant 74
6.3.1 Downloading and Installing the App 74
6.3.2 Registering an Installer Account 74
6.3.3 Quick Settings 74
6.3.4 Creating a Plant 78
6.3.5 Registering an Owner Account 78
6.4 Setting Function and Feature Parameters 78
6.4.1 Grid-tied Point Control 78
6.4.2 Apparent Power Control on the Inverter Output Side 82

7 Maintenance 84
7.1 System Power-Off 84
7.2 Routine Maintenance 85
7.3 Alarm Reference 87
7.4 Replacing a Fan 87

8 Handling the Inverter 89
8.1 Removing the SUN2000 89
8.2 Packing the SUN2000 89
8.3 Disposing of the SUN2000 89

9 Technical Specifications 90

A Grid Codes 98

B Device Commissioning 113

C Built-in PID Recovery 116

D Resetting a Password 118

E Setting Dry Contact Scheduling 119

F Setting RCD Parameters 121

G AFCI 123
H Rapid Shutdown 125
I NS Protection 126
J Smart I-V Curve Diagnosis 127
K Locating Insulation Resistance Faults 128
L Connecting to a Device on the App (the Device Supports WLAN) 132
M Contact Information 135
N Digital Power Customer Service 137
O Acronyms and Abbreviations 138

1 Safety Information

Statement

Before transporting, storing, installing, operating, using, and/or maintaining the equipment, read this document, strictly follow the instructions provided herein, and follow all the safety instructions on the equipment and in this document. In this document, "equipment" refers to the products, software, components, spare parts, and/or services related to this document; "the Company" refers to the manufacturer (producer), seller, and/or service provider of the equipment; "you" refers to the entity that transports, stores, installs, operates, uses, and/or maintains the equipment.

The **Danger**, **Warning**, **Caution**, and **Notice** statements described in this document do not cover all the safety precautions. You also need to comply with relevant international, national, or regional standards and industry practices. **The Company shall not be liable for any consequences that may arise due to violations of safety requirements or safety standards concerning the design, production, and usage of the equipment.**

The equipment shall be used in an environment that meets the design specifications. Otherwise, the equipment may be faulty, malfunctioning, or damaged, which is not covered under the warranty. The Company shall not be liable for any property loss, personal injury, or even death caused thereby.

Comply with applicable laws, regulations, standards, and specifications during transportation, storage, installation, operation, use, and maintenance.

Do not perform reverse engineering, decompilation, disassembly, adaptation, implantation, or other derivative operations on the equipment software. Do not study the internal implementation logic of the equipment, obtain the source code of the equipment software, violate intellectual property rights, or disclose any of the performance test results of the equipment software.

The Company shall not be liable for any of the following circumstances or their consequences:

- The equipment is damaged due to force majeure such as earthquakes, floods, volcanic eruptions, debris flows, lightning strikes, fires, wars, armed conflicts, typhoons, hurricanes, tornadoes, and other extreme weather conditions.
- The equipment is operated beyond the conditions specified in this document.

 Copyright © Huawei Technologies Co., Ltd.

- The equipment is installed or used in environments that do not comply with international, national, or regional standards.
- The equipment is installed or used by unqualified personnel.
- You fail to follow the operation instructions and safety precautions on the product and in the document.
- You remove or modify the product or modify the software code without authorization.
- You or a third party authorized by you cause the equipment damage during transportation.
- The equipment is damaged due to storage conditions that do not meet the requirements specified in the product document.
- You fail to prepare materials and tools that comply with local laws, regulations, and related standards.
- The equipment is damaged due to your or a third party's negligence, intentional breach, gross negligence, or improper operations, or other reasons not related to the Company.

1.1 Personal Safety

DANGER

Ensure that power is off during installation. Do not install or remove a cable with power on. Transient contact between the core of the cable and the conductor will generate electric arcs or sparks, which may cause a fire or personal injury.

DANGER

Non-standard and improper operations on the energized equipment may cause fire, electric shocks, or explosion, resulting in property damage, personal injury, or even death.

DANGER

Before operations, remove conductive objects such as watches, bracelets, bangles, rings, and necklaces to prevent electric shocks.

DANGER

During operations, use dedicated insulated tools to prevent electric shocks or short circuits. The dielectric withstanding voltage level must comply with local laws, regulations, standards, and specifications.

 Copyright © Huawei Technologies Co., Ltd.

WARNING

During operations, wear personal protective equipment such as protective clothing, insulated shoes, goggles, safety helmets, and insulated gloves.

Figure 1-1 Personal protective equipment

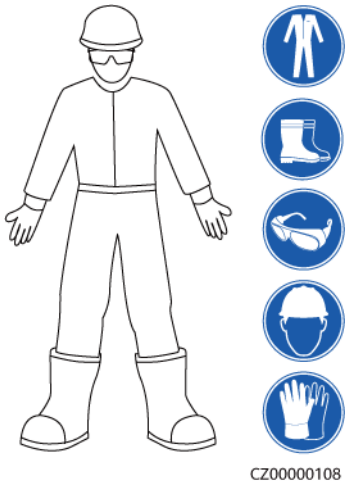

General Requirements

- Do not stop protective devices. Pay attention to the warnings, cautions, and related precautionary measures in this document and on the equipment.
- If there is a likelihood of personal injury or equipment damage during operations, immediately stop, report the case to the supervisor, and take feasible protective measures.
- Do not power on the equipment before it is installed or confirmed by professionals.
- Do not touch the power supply equipment directly or with conductors such as damp objects. Before touching any conductor surface or terminal, measure the voltage at the contact point to ensure that there is no risk of electric shock.
- Do not touch operating equipment because the enclosure is hot.
- Do not touch a running fan with your hands, components, screws, tools, or boards. Otherwise, personal injury or equipment damage may occur.
- In the case of a fire, immediately leave the building or the equipment area and activate the fire alarm or call emergency services. Do not enter the affected building or equipment area under any circumstances.

Personnel Requirements

- Only professionals and trained personnel are allowed to operate the equipment.
  - Professionals: personnel who are familiar with the working principles and structure of the equipment, trained or experienced in equipment operations and are clear of the sources and degree of various potential hazards in equipment installation, operation, maintenance

 Copyright © Huawei Technologies Co., Ltd.

  - Trained personnel: personnel who are trained in technology and safety, have required experience, are aware of possible hazards on themselves in certain operations, and are able to take protective measures to minimize the hazards on themselves and other people
- Personnel who plan to install or maintain the equipment must receive adequate training, be able to correctly perform all operations, and understand all necessary safety precautions and local relevant standards.
- Only qualified professionals or trained personnel are allowed to install, operate, and maintain the equipment.
- Only qualified professionals are allowed to remove safety facilities and inspect the equipment.
- Personnel who will perform special tasks such as electrical operations, working at heights, and operations of special equipment must possess the required local qualifications.
- Only authorized professionals are allowed to replace the equipment or components (including software).
- Only personnel who need to work on the equipment are allowed to access the equipment.

1.2 Electrical Safety

DANGER

Before connecting cables, ensure that the equipment is intact. Otherwise, electric shocks or fire may occur.

DANGER

Non-standard and improper operations may result in fire or electric shocks.

DANGER

Prevent foreign matter from entering the equipment during operations. Otherwise, equipment short-circuits or damage, load power derating, power failure, or personal injury may occur.

WARNING

For the equipment that needs to be grounded, install the ground cable first when installing the equipment and remove the ground cable last when removing the equipment.

 Copyright © Huawei Technologies Co., Ltd.

WARNING

During the installation of PV strings and the inverter, the positive or negative terminals of PV strings may be short-circuited to ground if the power cables are not properly installed or routed. In this case, an AC or DC short circuit may occur and damage the inverter. The resulting device damage is not covered under any warranty.

CAUTION

Do not route cables near the air intake or exhaust vents of the equipment.

CAUTION

The components (such as power distribution boxes, circuit breakers, and cables) used for electrical connections shall comply with fire resistance and flame retardance standards (such as IEC 60670-1). The materials and structure shall meet fire safety requirements.

General Requirements

- Follow the procedures described in the document for installation, operation, and maintenance. Do not reconstruct or alter the equipment, add components, or change the installation sequence without permission.
- Obtain approval from the national or local electric utility company before connecting the equipment to the grid.
- Observe the power plant safety regulations, such as the operation and work ticket mechanisms.
- Install temporary fences or warning ropes and hang "No Entry" signs around the operation area to keep unauthorized personnel away from the area.
- Before installing or removing power cables, turn off the switches of the equipment and its upstream and downstream switches.
- Before performing operations on the equipment, check that all tools meet the requirements and record the tools. After the operations are complete, collect all of the tools to prevent them from being left inside the equipment.
- Before installing power cables, check that cable labels are correct and cable terminals are insulated.
- When installing the equipment, use a torque tool of a proper measurement range to tighten the screws. When using a wrench to tighten the screws, ensure that the wrench does not tilt and the torque error does not exceed 10% of the specified value.
- Ensure that bolts are tightened with a torque tool and marked in red and blue after double-check. Installation personnel mark tightened bolts in blue. Quality inspection personnel confirm that the bolts are tightened and then mark them in red. (The marks must cross the edges of the bolts.)

 Copyright © Huawei Technologies Co., Ltd.

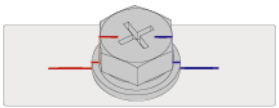

- If the equipment has multiple inputs, disconnect all the inputs and wait until the equipment is completely powered off before performing operations on the equipment.
- Before maintaining a downstream electrical or power distribution device, turn off the output switch on the power supply equipment.
- During equipment maintenance, attach "Do not switch on" labels near the upstream and downstream switches or circuit breakers as well as warning signs to prevent accidental connection. The equipment can be powered on only after troubleshooting is complete.
- Do not open equipment panels.
- Check equipment connections periodically, ensuring that all screws are securely tightened.
- Only qualified professionals can replace a damaged cable.
- Do not scrawl, damage, or block any labels or nameplates on the equipment. Promptly replace labels that have worn out.
- Do not use solvents such as water, alcohol, or oil to clean electrical components inside or outside of the equipment.
- The surge protection of the PV system and the building where the PV system is installed shall comply with local standards.

Grounding

- Ensure that the grounding impedance of the equipment complies with local electrical standards.
- Ensure that the equipment is connected permanently to the protective ground. Before operating the equipment, check its electrical connection to ensure that it is reliably grounded.
- Do not work on the equipment in the absence of a properly installed ground conductor.
- Do not damage the ground conductor.

Cabling Requirements

- When selecting, installing, and routing cables, follow local safety regulations and rules.
- When routing power cables, ensure that there is no coiling or twisting. Do not join or weld power cables. If necessary, use a longer cable.
- Ensure that all cables are properly connected and insulated, and meet specifications.
- Ensure that the slots and holes for routing cables are free from sharp edges, and that the positions where cables are routed through pipes or cable holes are equipped with cushion materials to prevent the cables from being damaged by sharp edges or burrs.
- Ensure that cables of the same type are bound together neatly and straight and that the cable sheath is intact. When routing cables of different types,

 Copyright © Huawei Technologies Co., Ltd.

ensure that they are away from each other without entanglement and overlapping.

- Secure buried cables using cable supports and cable clips. Ensure that the cables in the backfill area are in close contact with the ground to prevent cable deformation or damage during backfilling.
- If the external conditions (such as the cable layout or ambient temperature) change, verify the cable usage in accordance with the IEC-60364-5-52 or local laws and regulations. For example, check that the current-carrying capacity meets requirements.
- When routing cables, reserve at least 30 mm clearance between the cables and heat-generating components or areas. This prevents deterioration or damage to the cable insulation layer.

1.3 Environment Requirements

DANGER

Do not expose the equipment to flammable or explosive gas or smoke. Do not perform any operation on the equipment in such environments.

DANGER

Do not store any flammable or explosive materials in the equipment area.

DANGER

Do not place the equipment near heat sources or fire sources, such as smoke, candles, heaters, or other heating devices. Overheat may damage the equipment or cause a fire.

WARNING

Install the equipment in an area far away from liquids. Do not install it under areas prone to condensation, such as under water pipes and air exhaust vents, or areas prone to water leakage, such as air conditioner vents, ventilation vents, or feeder windows of the equipment room. Ensure that no liquid enters the equipment to prevent faults or short circuits.

WARNING

To prevent damage or fire due to high temperature, ensure that the ventilation vents or heat dissipation systems are not obstructed or covered by other objects while the equipment is running.

 Copyright © Huawei Technologies Co., Ltd.

General Requirements

- Store the equipment according to the storage requirements. Equipment damage caused by unqualified storage conditions is not covered under the warranty.
- Keep the installation and operating environments of the equipment within the allowed ranges. Otherwise, its performance and safety will be compromised.
- The operating temperature range provided in the equipment's technical specifications refers to the ambient temperatures in equipment's installation environment.
- Do not install, use, or operate outdoor equipment and cables (including but not limited to moving equipment, operating equipment and cables, inserting connectors to or removing connectors from signal ports connected to outdoor facilities, working at heights, performing outdoor installation, and opening doors) in harsh weather conditions such as lightning, rain, snow, and level 6 or stronger wind.
- Do not install the equipment in an environment with dust, smoke, volatile or corrosive gases, infrared and other radiations, organic solvents, or salty air.
- Do not install the equipment in an environment with conductive metal or magnetic dust.
- Do not install the equipment in an area conducive to the growth of microorganisms such as fungus or mildew.
- Do not install the equipment in an area with strong vibration, noise, or electromagnetic interference.
- Ensure that the site complies with local laws, regulations, and related standards.
- Ensure that the ground in the installation environment is solid, free from spongy or soft soil, and not prone to subsidence. The site must not be located in a low-lying land prone to water or snow accumulation, and the horizontal level of the site must be above the highest water level of that area in history.
- Do not install the equipment in a position that may be submerged in water.
- If the equipment is installed in a place with abundant vegetation, in addition to routine weeding, harden the ground underneath the equipment using cement or gravel (the area shall be greater than or equal to 3 m x 2.5 m).
- Do not install the equipment outdoors in salt-affected areas because it may be corroded. A salt-affected area refers to the region within 500 m of the coast or prone to sea breeze. Regions prone to sea breeze vary with weather conditions (such as typhoons and monsoons) or terrains (such as dams and hills).
- Before installation, operation, and maintenance, clean up any water, ice, snow, or other foreign objects on the top of the equipment.
- When installing the equipment, ensure that the installation surface is solid enough to bear the weight of the equipment.
- After installing the equipment, remove the packing materials such as cartons, foam, plastics, and cable ties from the equipment area.

 Copyright © Huawei Technologies Co., Ltd.

1.4 Mechanical Safety

WARNING

Ensure that all necessary tools are ready and inspected by a professional organization. Do not use tools that have signs of scratches or fail to pass the inspection or whose inspection validity period has expired. Ensure that the tools are secure and not overloaded.

WARNING

Do not drill holes into the equipment. Doing so may affect the sealing performance and electromagnetic containment of the equipment and damage components or cables inside. Metal shavings from drilling may short-circuit boards inside the equipment.

General Requirements

- Repaint any paint scratches caused during equipment transportation or installation in a timely manner. Equipment with scratches must not be exposed for an extended period of time.
- Do not perform operations such as arc welding and cutting on the equipment without evaluation by the Company.
- Do not install other devices on the top of the equipment without evaluation by the Company.
- When performing operations over the top of the equipment, take measures to protect the equipment against damage.
- Use correct tools and operate them in the correct way.

Moving Heavy Objects

- Be cautious to prevent injury when moving heavy objects.

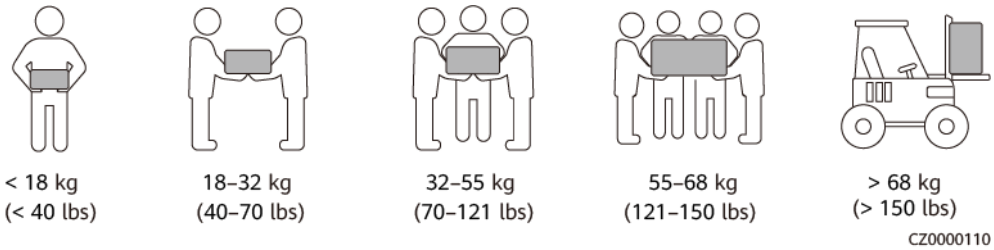

- If multiple persons need to move a heavy object together, determine the manpower and work division with consideration of height and other conditions to ensure that the weight is equally distributed.
- If two persons or more move a heavy object together, ensure that the object is lifted and landed simultaneously and moved at a uniform pace under the supervision of one person.

 Copyright © Huawei Technologies Co., Ltd.

- Wear personal protective gears such as protective gloves and shoes when manually moving the equipment.
- To move an object by hand, approach to the object, squat down, and then lift the object gently and stably by the force of the legs instead of your back. Do not lift it suddenly or turn your body around.
- Do not quickly lift a heavy object above your waist. Place the object on a workbench that is half-waist high or any other appropriate place, adjust the positions of your palms, and then lift it.
- Move a heavy object stably with balanced force at an even and low speed. Put down the object stably and slowly to prevent any collision or drop from scratching the surface of the equipment or damaging the components and cables.
- When moving a heavy object, be aware of the workbench, slope, staircase, and slippery places. When moving a heavy object through a door, ensure that the door is wide enough to move the object and avoid bumping or injury.
- When transferring a heavy object, move your feet instead of turning your waist around. When lifting and transferring a heavy object, ensure that your feet point to the target direction of movement.
- When transporting the equipment using a pallet truck or forklift, ensure that the tynes are properly positioned so that the equipment does not topple. Before moving the equipment, secure it to the pallet truck or forklift using ropes. When moving the equipment, assign dedicated personnel to take care of it.
- Choose sea, roads in good conditions, or airplanes for transportation. Do not transport the equipment by railway. Avoid tilt or jolt during transportation.

Using Ladders

- Use wooden or insulated ladders when you need to perform live-line working at heights.
- Platform ladders with protective rails are preferred. Single ladders are not recommended.
- Before using a ladder, check that it is intact and confirm its load bearing capacity. Do not overload it.
- Ensure that the ladder is securely positioned and held firm.

CZ00000107

- When climbing up the ladder, keep your body stable and your center of gravity between the side rails, and do not overreach to the sides.

- When a step ladder is used, ensure that the pull ropes are secured.
- If a single ladder is used, the recommended angle for the ladder against the floor is 75 degrees, as shown in the following figure. A square can be used to measure the angle.

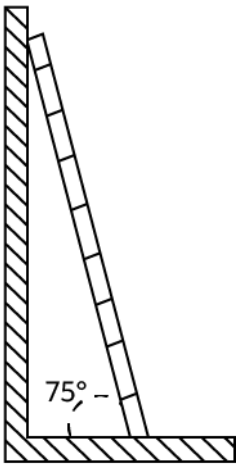

PI02SC0008

- If a single ladder is used, ensure that the wider end of the ladder is at the bottom, and take protective measures to prevent the ladder from sliding.
- If a single ladder is used, do not climb higher than the fourth rung of the ladder from the top.
- If you use a single ladder to climb up to a platform, ensure that the ladder is at least 1 m higher than the platform.

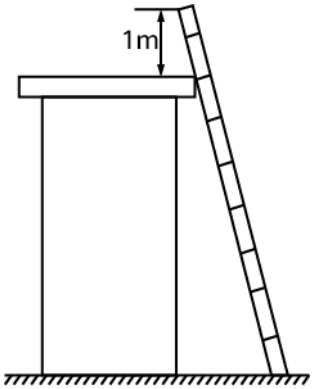

PI02SC0009

Hoisting

- Only trained and qualified personnel are allowed to perform hoisting operations.
- Install temporary warning signs or fences to isolate the hoisting area.
- Ensure that the foundation where hoisting is performed on meets the load-bearing requirements.
- Before hoisting objects, ensure that hoisting tools are firmly secured onto a fixed object or wall that meets the load-bearing requirements.
- During hoisting, do not stand or walk under the crane or the hoisted objects.
- Do not drag steel ropes and hoisting tools or bump the hoisted objects against hard objects during hoisting.

 Copyright © Huawei Technologies Co., Ltd.

- Ensure that the angle between two hoisting ropes is no more than 90 degrees, as shown in the following figure.

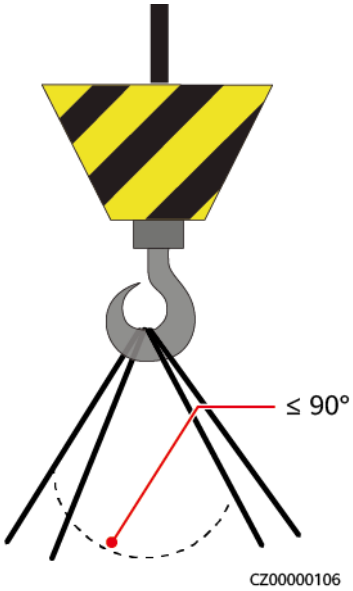

Drilling Holes

- Obtain consent from the customer and contractor before drilling holes.
- Wear protective equipment such as safety goggles and protective gloves when drilling holes.
- To avoid short circuits or other risks, do not drill holes into buried pipes or cables.
- When drilling holes, protect the equipment from shavings. After drilling, clean up any shavings.

 Copyright © Huawei Technologies Co., Ltd.

2 Overview

2.1 Product Introduction

Function

The SUN2000 is a three-phase grid-tied PV string inverter that converts the DC power generated by PV strings into AC power and feeds the power into the power grid.

Model

This document involves the following product models:

- SUN2000-50KTL-ZHM3
- SUN2000-50KTL-M3
- SUN2000-50KTL-BRM3

Figure 2-1 Model number

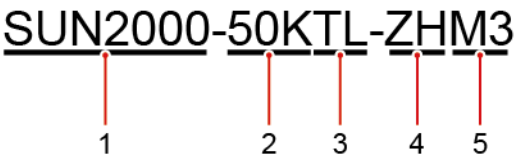

Table 2-1 Model description

No.	Meaning	Description
1	Product family identifier	SUN2000: grid-tied solar inverter
2	Power level identifier	50K: The rated power is 50 kW.

 Copyright © Huawei Technologies Co., Ltd.

No.	Meaning	Description
3	Topology identifier	TL: transformerless
4	Region identifier	ZH: Chinese mainland BR: Brazil
5	Product series identifier	M3: product series with an input voltage level of 1100 V DC

Networking Application

The SUN2000 applies to grid-tied systems for commercial and industrial (C&I) rooftop projects and small-sized ground-mounted plants. The system consists of PV strings, grid-tied inverters, AC switches, and power distribution units (PDUs).

Figure 2-2 Networking application – single inverter scenario

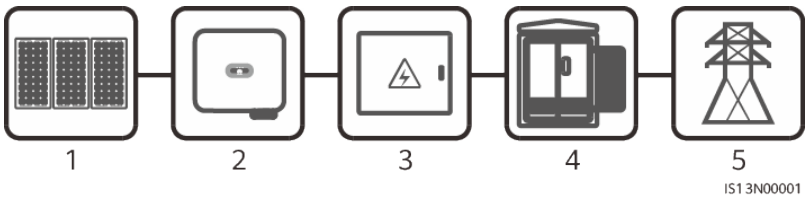

(1) PV string	(2) SUN2000	(3) AC PDU
(4) Isolation transformer	(5) Power grid	-

Supported Earthing Systems

The SUN2000 supports the TN-S, TN-C, TN-C-S, TT, and IT earthing systems.

Figure 2-3 Earthing systems

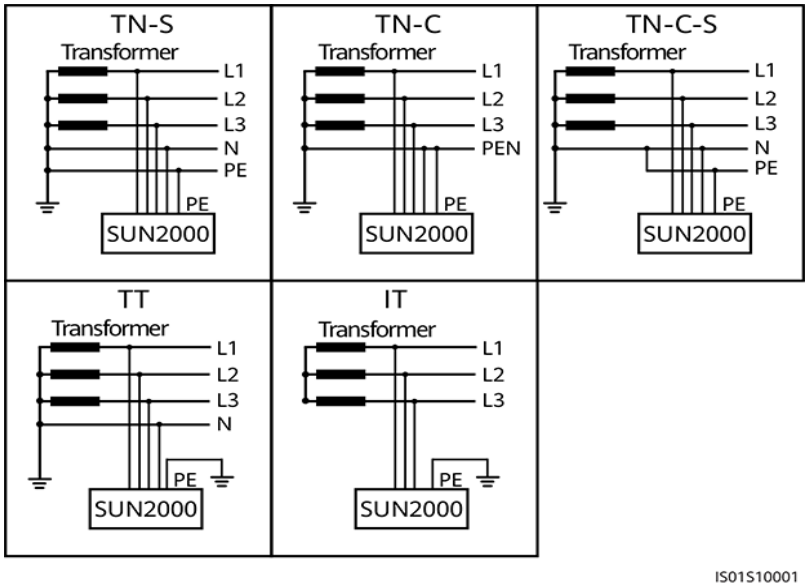

2.2 Appearance

Figure 2-4 Appearance

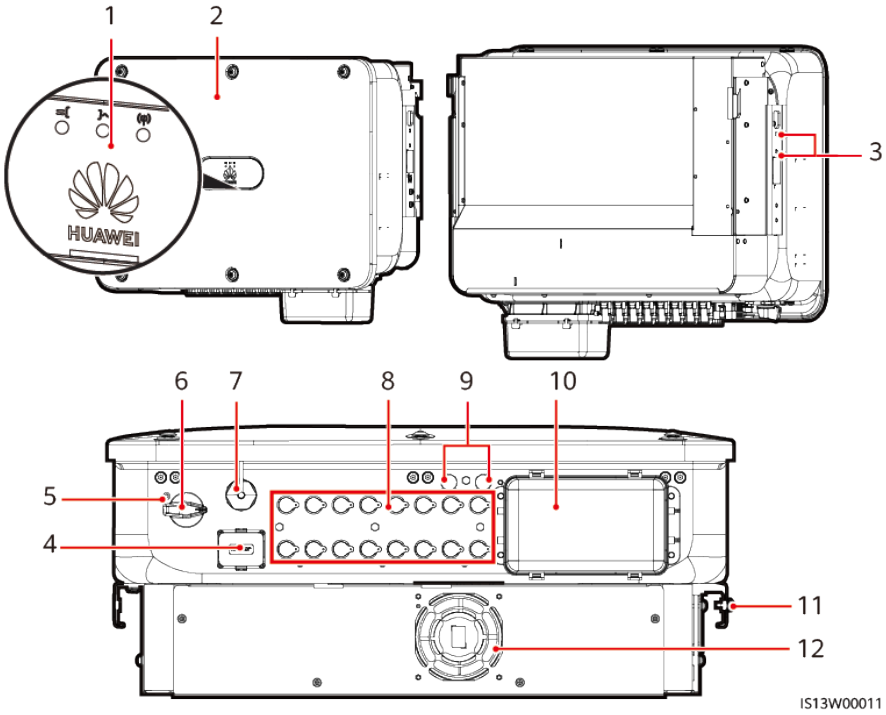

(1) LED indicators	(2) Front panel
(3) Screw holes for fixing the sunshade	(4) Communications port (COM)
(5) Hole for the DC switch locking screw	(6) DC switch (DC SWITCH)
(7) Smart Dongle port (4G/WLAN-FE)	(8) DC input terminals (PV1–PV8)
(9) Ventilation valves	(10) AC output ports
(11) Ground point	(12) Fan

 Copyright © Huawei Technologies Co., Ltd.

2.3 Label Description

Symbol	Name	Meaning
	Delayed discharge	• High voltage exists after the inverter is powered on. Only qualified and trained electrical technicians are allowed to perform operations on the inverter. • Residual voltage exists after the inverter is powered off. It takes 5 minutes for the inverter to discharge to a safe voltage.
	High temperature hazard	Do not touch the inverter when it is running because its enclosure is hot.
	Electric shock warning	• High voltage exists after the inverter is powered on. Only qualified and trained electrical technicians are allowed to perform operations on the inverter. • High touch current exists after the inverter is powered on. Before powering on the inverter, ensure that it is properly grounded.

 Copyright © Huawei Technologies Co., Ltd.

Symbol	Name	Meaning
	Refer to documentation	Reminds operators to refer to the documentation provided with the device. Losses caused by operations that do not comply with the requirements of site selection, storage, or mounting specified in the user manual are not covered under the warranty.
	Protective earthing	Indicates the position for connecting the protective earthing (PE) cable.
	Operation warning	Do not remove the DC input connector or AC output connector with power on.
	Device weight	The inverter is heavy and must be carried by three persons.
	Inverter handle burn warning	Do not touch the handles until 10 minutes after the inverter is shut down.

Symbol	Name	Meaning
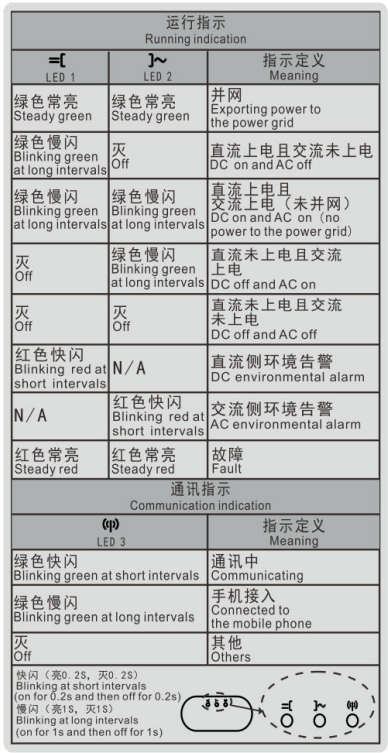 运行指示 Running indication LED 1 / LED 2 / 指示定义 Meaning 绿色常亮 Steady green / 绿色常亮 Steady green / 并网 Exporting power to the power grid 绿色慢闪 Blinking green at long intervals / 灭 Off / 直流上电且交流未上电 DC on and AC off 绿色慢闪 Blinking green at long intervals / 绿色慢闪 Blinking green at long intervals / 直流上电且交流上电（未并网） DC on and AC on（no power to the power grid） 灭 Off / 绿色慢闪 Blinking green at long intervals / 直流未上电且交流上电 DC off and AC on 灭 Off / 灭 Off / 直流未上电且交流未上电 DC off and AC off 红色快闪 Blinking red at short intervals / N/A / 直流侧环境告警 DC environmental alarm N/A / 红色快闪 Blinking red at short intervals / 交流侧环境告警 AC environmental alarm 红色常亮 Steady red / 红色常亮 Steady red / 故障 Fault 通讯指示 Communication indication LED 3 / 指示定义 Meaning 绿色快闪 Blinking green at short intervals / 通讯中 Communicating 绿色慢闪 Blinking green at long intervals / 手机接入 Connected to the mobile phone 灭 Off / 其他 Others 快闪（亮0.2S，灭0.2S） Blinking at short intervals (on for 0.2s and then off for 0.2s) 慢闪（亮1S，灭1S） Blinking at long intervals (on for 1s and then off for 1s)	Indicators	Indicates the inverter operating information.
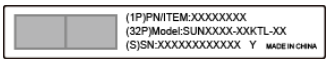 (1P)PN/ITEM:XXXXXXXX (32P)Model:SUNXXXX-XXKTL-XX (S)SN:XXXXXXXXXXXX Y MADE IN CHINA	Inverter SN	Indicates the inverter serial number.
WLAN SSID: SUN2000-XXXXXXXXXX Password:XXXXXXXX	QR code for inverter WLAN connection	Scan the QR code to connect to the inverter WLAN.

2.4 Working Principles

2.4.1 Circuit Diagram

The SUN2000 receives inputs from eight PV strings. Then the inputs are grouped into four MPPT circuits inside the SUN2000, with each MPPT circuit tracking the maximum power point of two PV strings. The DC power is then converted into single-phase AC power through an inverter circuit. Surge protection is supported on both the DC and AC sides.

Figure 2-5 Schematic diagram

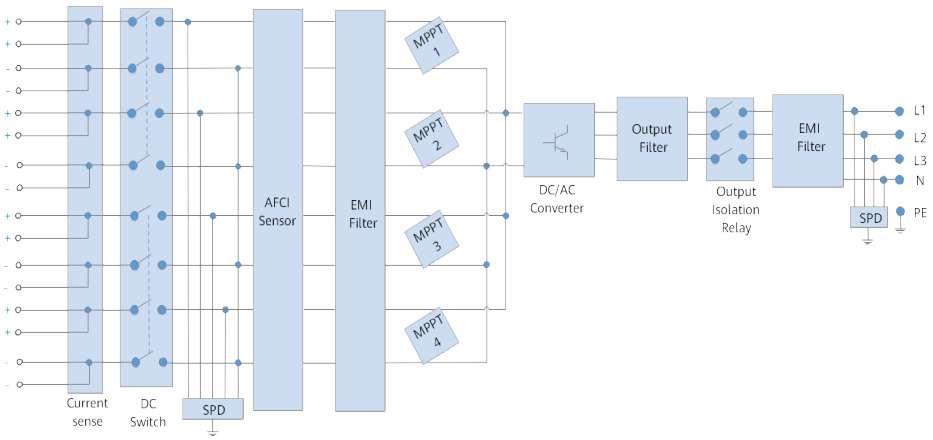

2.4.2 Working Modes

The SUN2000 can work in Standby, Operating, or Shutdown mode.

Figure 2-6 Working modes

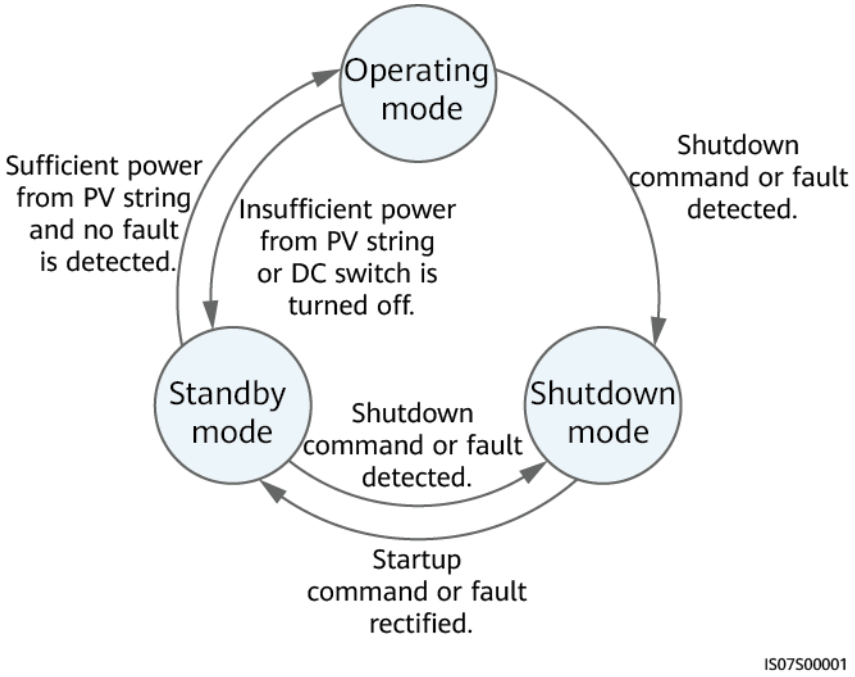

Table 2-2 Working mode description

Working Mode	Description
Standby	The SUN2000 enters Standby mode when the external environment does not meet the operating requirements. In Standby mode: ● The SUN2000 continuously performs status check and enters the Operating mode once the operating requirements are met. ● The SUN2000 enters Shutdown mode after detecting a shutdown command or a fault after startup.
Operating	In Operating mode: ● The SUN2000 converts DC power from PV strings into AC power and feeds the power to the power grid. ● The SUN2000 tracks the maximum power point to maximize the PV string output. ● If the SUN2000 detects a fault or a shutdown command, it enters the Shutdown mode. ● The SUN2000 enters Standby mode after detecting that the PV string output power is not suitable for connecting to the power grid for generating power.
Shutdown	● In Standby or Operating mode, the SUN2000 enters Shutdown mode after detecting a fault or shutdown command. ● In Shutdown mode, the SUN2000 enters Standby mode after detecting a startup command or that the fault is rectified.

 Copyright © Huawei Technologies Co., Ltd.

3 Inverter Storage

NOTICE

- Store devices according to the storage requirements. Device damage caused by unqualified storage conditions is not covered under the warranty.
- Do not store the devices without outer packaging.

The following requirements shall be met if inverters are not put into use immediately:

- Do not remove the outer packaging. Check the packaging regularly (recommended: once every three months). Replace any packaging that is damaged during storage.
- If an inverter is unpacked but will not be used immediately, put it back to the original packaging with the desiccant, and seal it with tape.
- Inverters must be stored in a clean and dry environment with appropriate temperature and humidity. The air must not contain corrosive or flammable gases.

Figure 3-1 Storage temperature and humidity

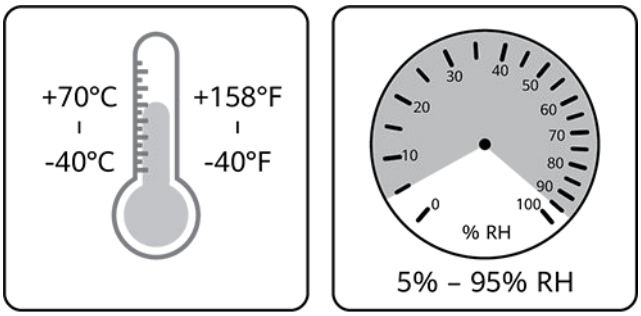

IS07W00011

- When temporarily storing inverters outdoors, do not stack them on a pallet. Take rainproof measures such as using tarpaulins to protect inverters from rain and water.
- Do not tilt a packing case or place it upside down.
- To avoid personal injury or device damage, stack inverters with caution to prevent them from falling over.

 Copyright © Huawei Technologies Co., Ltd.

Figure 3-2 Maximum number of stacking layers (In the figure, N indicates the maximum number of stacking layers.)

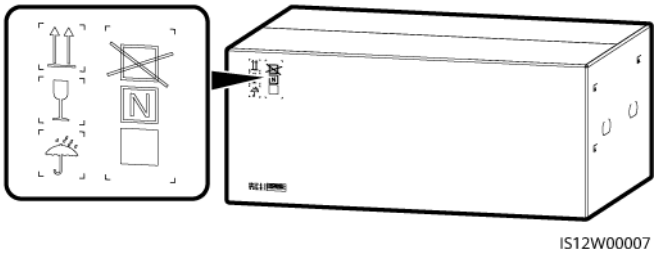

- Do not store inverters for more than two years. If inverters have been stored for two years or longer, they must be checked and tested by professionals before being put into use.
- If an inverter has not been running for six months or longer after being mounted, it may have failed and must be checked and tested by professionals before being put into operation.

4 Installation

4.1 Checking Before Installation

Outer Packing Materials

Before unpacking the inverter, check the outer packing materials for damage, such as holes and cracks, and check the inverter model. If any damage is found or the inverter model is not what you requested, do not unpack the package and contact your supplier as soon as possible.

NOTE

You are advised to remove the packing materials within 24 hours before installing the inverter.

Package Contents

NOTICE

- After placing the equipment in the installation position, unpack it with care to prevent scratches. Keep the equipment stable during unpacking.

After unpacking the inverter, check that the contents are intact and complete. If any damage is found or any component is missing, contact your supplier.

NOTE

For details about the number of contents, see the *Packing List* in the packing case.

 Copyright © Huawei Technologies Co., Ltd.

4.2 Tools

Category	Tools and Instruments		
Installation	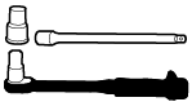 Insulated torque socket wrench (including an extension bar)	Insulated torque socket wrench (including an extended socket)	Phillips insulated torque screwdriver
	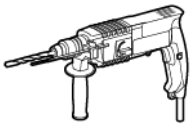 Hammer drill	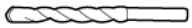 Hammer drill bit	Rubber mallet
	Utility knife	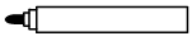 Marker	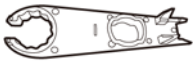 Open-end wrench H4TW0001 (Amphenol)
	Cable cutter	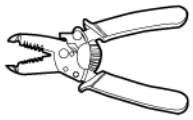 Wire stripper	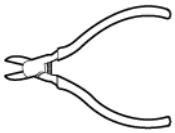 Diagonal pliers
	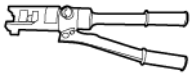 Hydraulic pliers	Heat gun	Crimping tool H4TC0003 (Amphenol)

 Copyright © Huawei Technologies Co., Ltd.

Category	Tools and Instruments		
	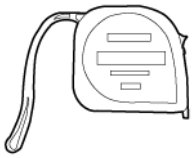 Steel measuring tape	Level	Multimeter
	Cable tie	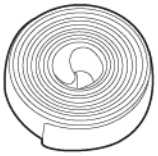 Heat shrink tubing	Vacuum cleaner
Personal protective equipment (PPE)	Goggles	Protective shoes	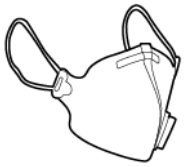 Dust mask
	Protective gloves	Insulated gloves	-

4.3 Determining the Installation Position

Installation Environment Requirements

- Keep the inverter out of reach of children.
- The inverter is protected to IP66 and can be installed indoors or outdoors.
- Do not install the inverter in working or living areas to avoid personal injury or property loss caused by accidental contact by non-professionals or other reasons during device operation.
- Do not install the inverter in noise-sensitive areas (such as residential areas, office areas, and schools) to avoid complaints. If the preceding areas are unavoidable, the distance between the installation position and noise-sensitive areas must be greater than 40 m. Alternatively, use other low-noise models.

 Copyright © Huawei Technologies Co., Ltd.

- If the device is installed in public places (such as parking lots, stations, and factories) other than working and living areas, install a protective net outside the device and set up a safety warning sign to isolate the device. This is to avoid personal injury or property loss caused by accidental contact by non-professionals or other reasons during device operation.
- If the equipment is installed in a place with abundant vegetation, in addition to routine weeding, harden the ground underneath the equipment using cement or gravel (the area shall be greater than or equal to 3 m x 2.5 m).
- Do not install the equipment in an area with strong vibration, noise, or electromagnetic interference. The equipment shall be installed in an environment with a magnetic field strength less than 4 Gauss. If the magnetic field strength is greater than or equal to 4 Gauss, the equipment may fail to work properly. If the magnetic field strength is high, for example, in a smeltery, you are advised to use a gauss meter to measure the magnetic field strength of the equipment installation position when the smelting equipment is running normally.
- Do not install the inverter in areas containing flammable materials (such as sulfur, phosphorus, liquefied petroleum gas, marsh gas, flour, and cotton) to avoid personal injury or property loss caused by fire or other reasons.
- Do not install the inverter in areas containing explosives (such as blasting agents, display shells, fireworks, and firecrackers) to avoid personal injury or property loss caused by explosion or other reasons.
- Do not install the inverter in areas with corrosive substances (such as sulfuric acid, hydrochloric acid, nitric acid, hydrogen sulfide, and chlorine) to avoid inverter failure caused by corrosion, which is not covered under the warranty.
- Avoid installing inverters in easily accessible locations, as they operate at a high voltage and their enclosures and heat sinks become hot during use.
- The inverter provides self-protection in high-temperature environments. Its energy yield may decrease as the ambient temperature increases. Ensure that the following installation requirements are met:
  - Install the inverter in a well-ventilated environment to ensure good heat dissipation.
  - If the inverter is installed in an enclosed environment, the heat dissipation equipment or ventilation equipment shall be installed. The indoor ambient temperature must not be higher than the outdoor ambient temperature.
  - You are advised to install the device in a sheltered place or install an awning over it to avoid direct sunlight.
  - Reserve sufficient clearance around the inverter for installation and heat dissipation.
- The inverter will become corroded if installed in areas exposed to salt. Before installing the inverter outdoors in such areas, consult with the Company. A salt-affected area refers to the region within 500 m of the coast or prone to sea breeze. Regions prone to sea breeze vary with weather conditions (such as typhoons and monsoons) or terrains (such as dams and hills).

NOTE

The inverter shall be physically separated from residential environments or radio receivers by distance greater than 30 m.

 Copyright © Huawei Technologies Co., Ltd.

CAUTION

The SUN2000-50KTL-BRM3 shall be installed in compliance with the technical standards for PV electrical installation (NBR 16690) and the technical standards for PV system fire risk management (IEC 63226).

Mounting Structure Requirements

- The mounting structure for the inverter must be fireproof. Do not install the inverter on flammable building materials to avoid personal injury or property loss caused by fire or other reasons.
- Ensure that the installation surface is solid enough to bear the weight of the inverter to avoid personal injury or property loss caused by the collapse of the mounting structure or other reasons.
- In residential areas, do not install the inverter on plaster board walls or walls made of similar materials with a weak sound insulation performance because the noise generated by the inverter may interfere with residents.

Installation Angle Requirements

The inverter can be wall-mounted or support-mounted. The installation angle requirements are as follows:

- Install the inverter vertically or at a maximum back tilt of 15 degrees to facilitate heat dissipation.
- Do not install the inverter at forward tilted, excessive backward tilted, side tilted, horizontal, or upside down positions.

Figure 4-1 Installation angle

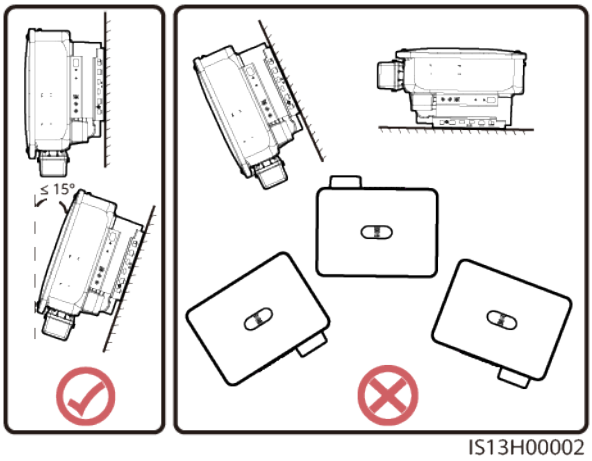

Installation Clearance Requirements

- Reserve enough clearances around the inverter to ensure sufficient space for installation and heat dissipation.

Figure 4-2 Clearances

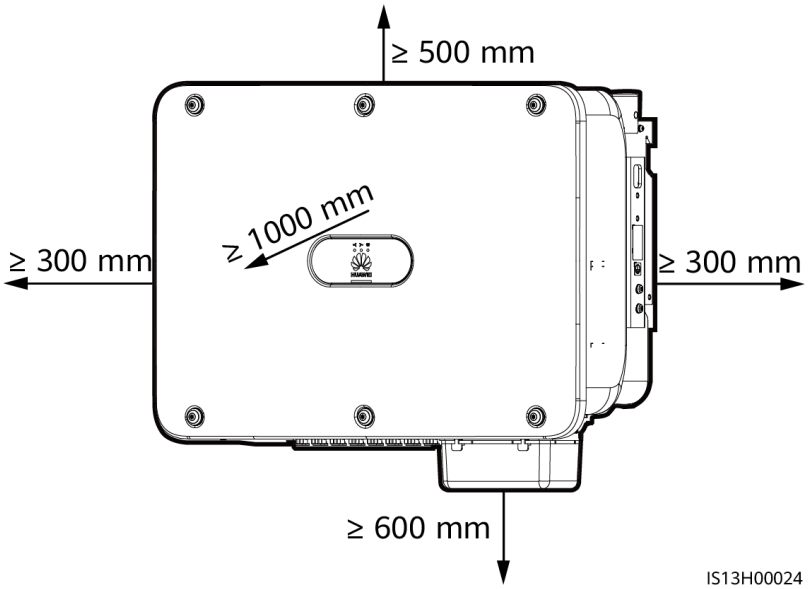

- If multiple inverters need to be installed, horizontal installation, stacked installation on supports, and back-to-back staggered installation on supports are recommended. Triangle installation, stacked installation on a wall, and back-to-back installation on supports for multiple inverters are not recommended.

Figure 4-3 Horizontal installation (recommended)

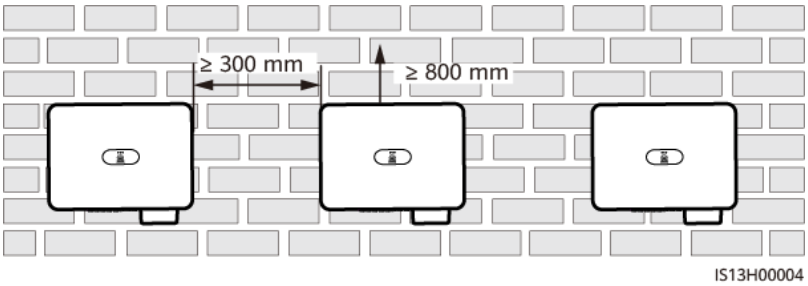

Figure 4-4 Two-layer triangle installation (not recommended)

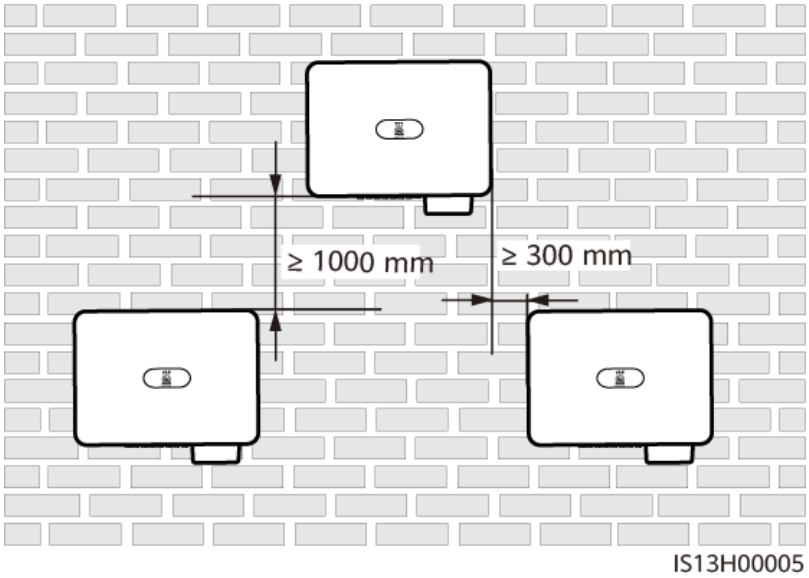

Figure 4-5 Three-layer triangle installation (not recommended)

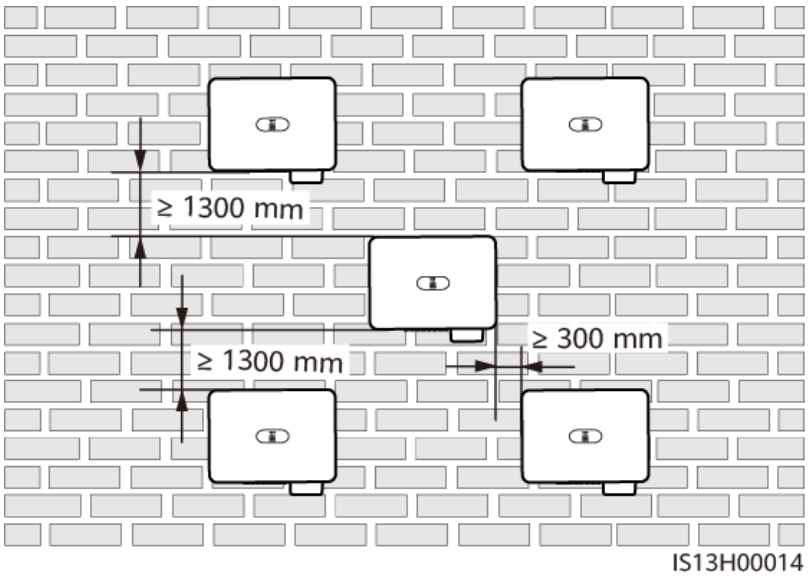

Figure 4-6 Stacked installation on a wall (not recommended)

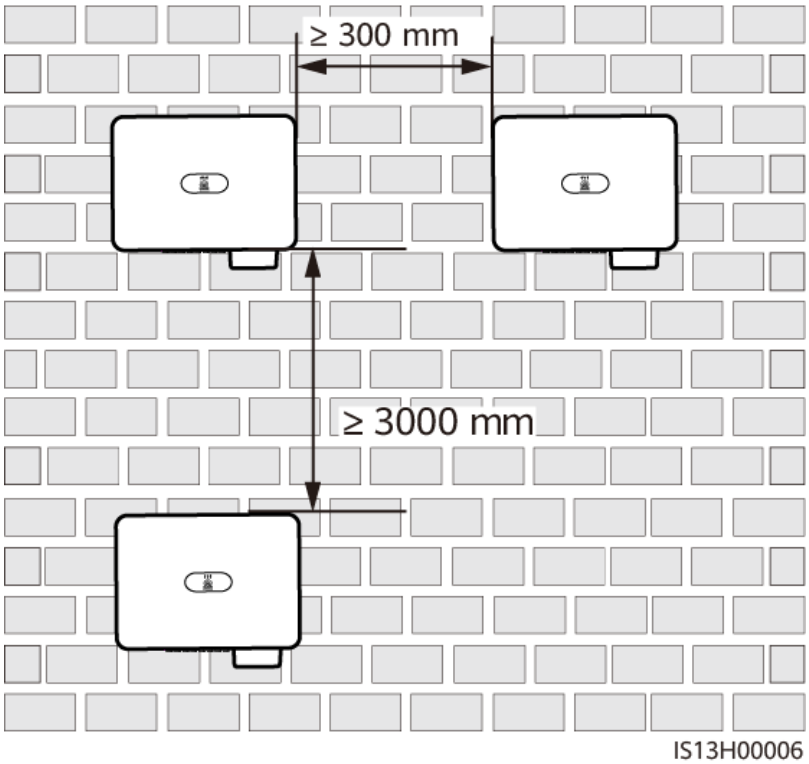

Figure 4-7 Stacked installation on supports (recommended)

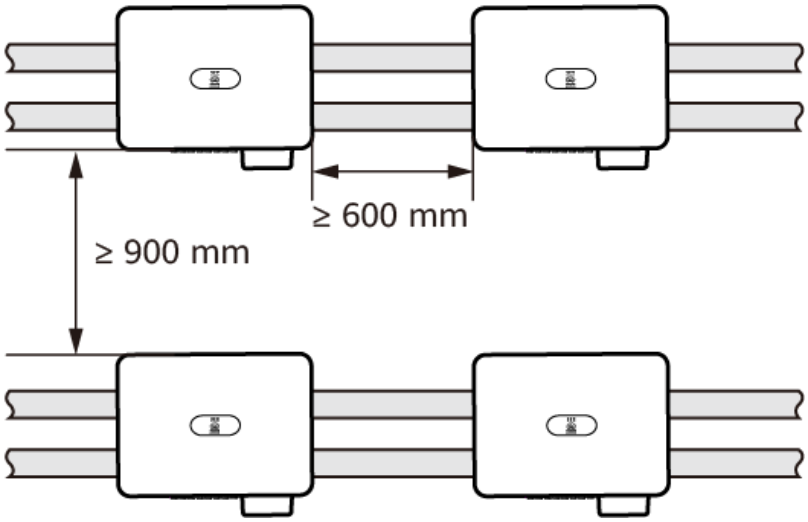

NOTE

If stacked installation on supports is adopted, the clearance between the rear of devices and the wall must be at least 500 mm. If the clearance is less than 500 mm, refer to the clearance requirements shown in **Figure 4-6**.

 Copyright © Huawei Technologies Co., Ltd.

Figure 4-8 Back-to-back staggered installation on a support (recommended)

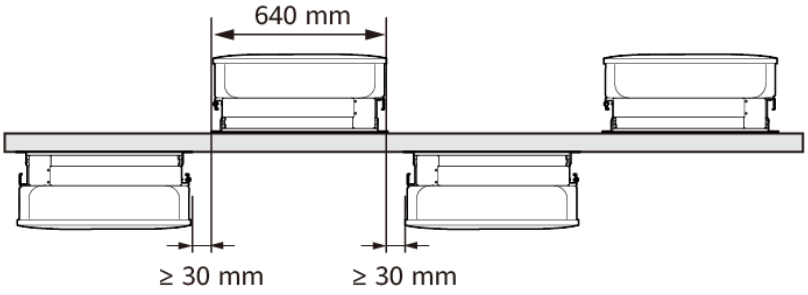

Figure 4-9 Back-to-back installation on supports (not recommended)

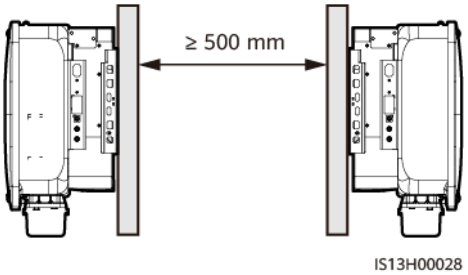

NOTE

- If back-to-back installation on supports is adopted, the clearance between devices shall be at least 500 mm provided that ventilation is ensured between supports.
- The installation figures are for reference only and are irrelevant to the inverter cascading scenario.

4.4 Moving the Inverter

Procedure

Step 1 Lift the inverter out of the packing case and move it to the installation position.

CAUTION

- Move the inverter with care to prevent device damage and personal injury.
- The connectors and terminals at the bottom of the inverter must not bear any weight. Ensure that they do not come into direct contact with the ground or other supports.
- When you need to temporally place the inverter on the ground, place foam or cardboard under the inverter to prevent damage to its enclosure.

 Copyright © Huawei Technologies Co., Ltd.

Figure 4-10 Moving the inverter

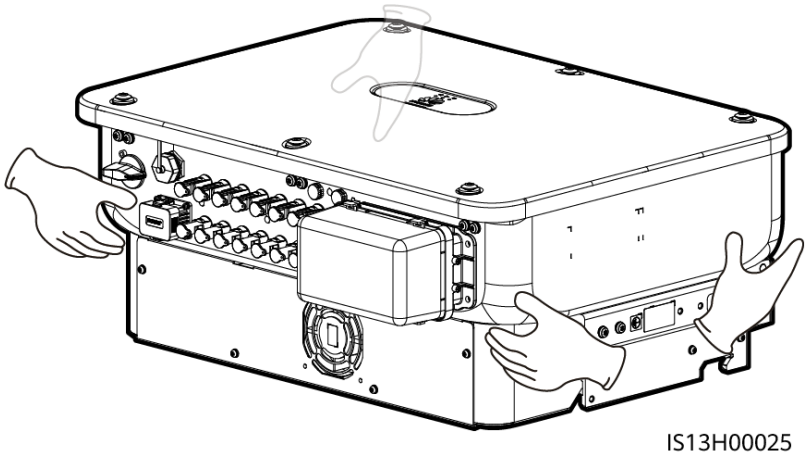

----End

4.5 Installing the Mounting Bracket

Installation Precautions

Before installing the mounting bracket, remove the torx key and keep it for later use.

Figure 4-11 Position for binding the torx key

(1) Torx key

Figure 4-12 shows the dimensions of mounting holes for the inverter.

Figure 4-12 Mounting bracket dimensions

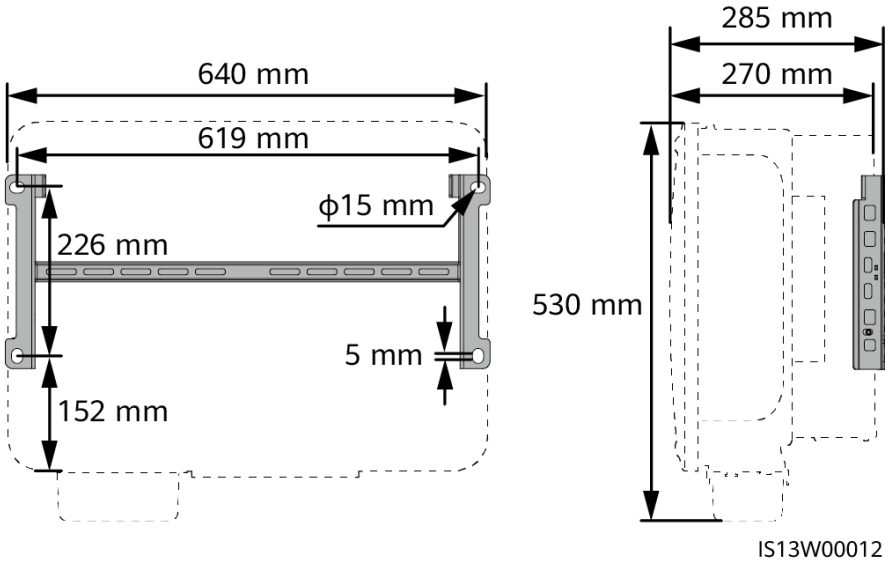

4.5.1 Support Mounting

Procedure

Step 1 Secure the mounting bracket.

Figure 4-13 Securing the mounting bracket

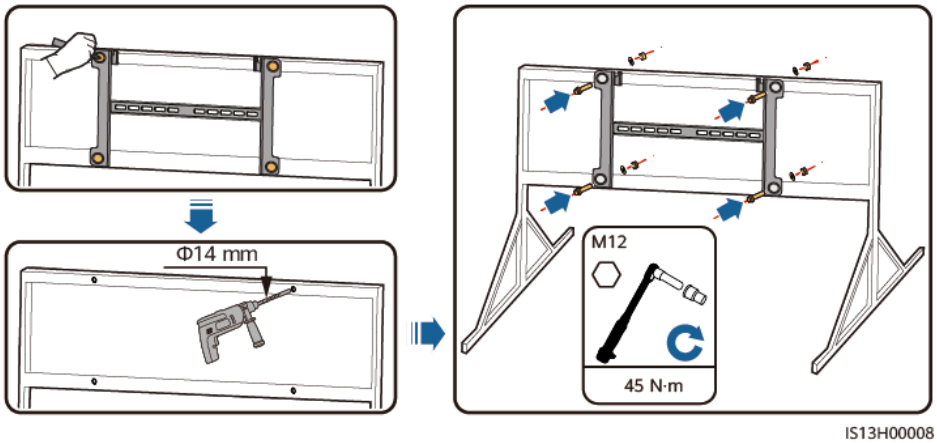

NOTE

You are advised to apply anti-rust paint on the hole positions for protection.

----End

4.5.2 Wall Mounting

Prerequisites

You have prepared expansion bolts. M12x60 stainless steel expansion bolts are recommended.

Procedure

Step 1 Determine the hole positions and mark them using a marker.

Step 2 Secure the mounting bracket.

DANGER

Avoid drilling holes into the water pipes or power cables buried in the wall.

Figure 4-14 Expansion bolt structure

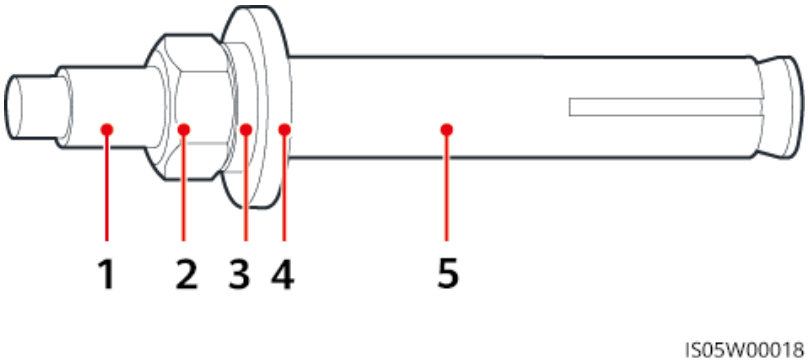

(1) Bolt (2) Nut (3) Spring washer

(4) Flat washer (5) Expansion sleeve

NOTICE

- To prevent dust inhalation or contact with eyes, wear safety goggles and a dust mask when drilling holes.
- Use a vacuum cleaner to clean up dust in and around the holes, and measure the spacing. If the holes are inaccurately positioned, drill the holes again in correct positions.
- Level the top of the expansion sleeve with the concrete wall after removing the nut, spring washer, and flat washer. Otherwise, the mounting bracket will not be securely installed on the concrete wall.

 Copyright © Huawei Technologies Co., Ltd.

Figure 4-15 Installing an expansion bolt

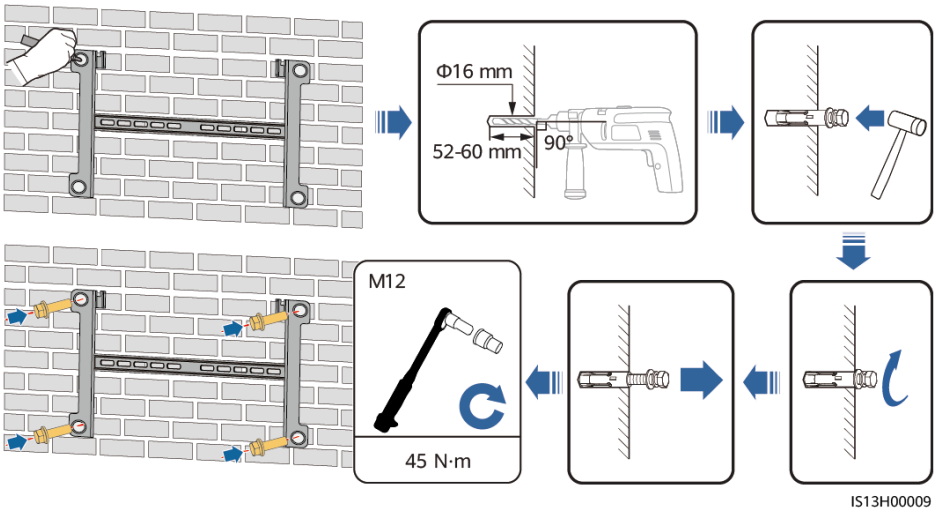

----End

4.6 Installing the Inverter

Step 1 (Optional) Install the DC switch locking screw.

NOTE

- The DC switch locking screw is used to lock the DC switch (DC SWITCH) to prevent the inverter from being started by mistake.
- For models used in Australia, install the DC switch locking screw according to local standards. The DC switch locking screw is delivered with the inverter.

Figure 4-16 Installing the DC switch locking screw

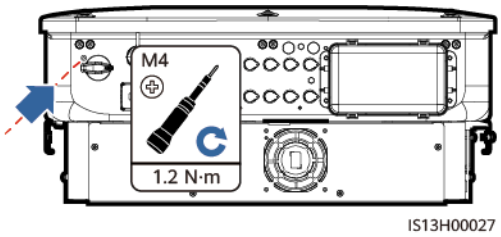

Step 2 Install the inverter on the mounting bracket.

Figure 4-17 Installing the inverter

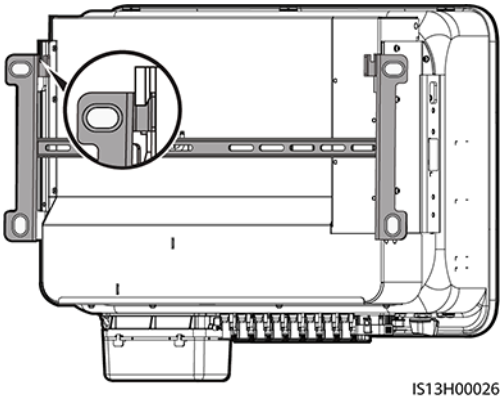

Step 3 Tighten the nuts on both sides of the inverter.

Figure 4-18 Tightening nuts

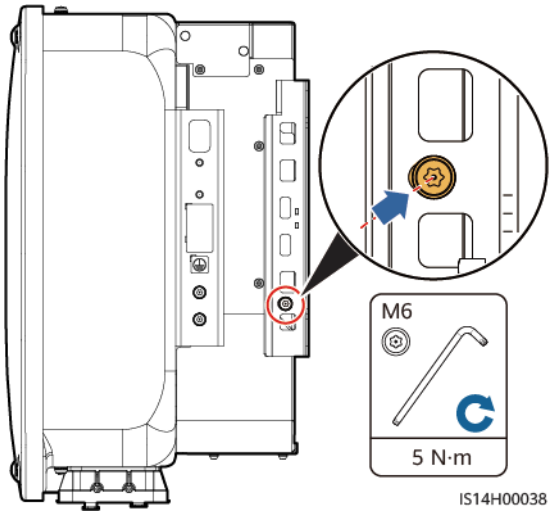

NOTICE

Secure the screws on the sides before connecting cables.

----End

5 Electrical Connections

5.1 Precautions

DANGER

When exposed to sunlight, the PV arrays supply DC voltage to the inverter. Before connecting cables, ensure that all **DC SWITCH** on the inverter are OFF. Otherwise, the high voltage of the inverter may result in electric shocks.

DANGER

- The site must be equipped with qualified fire fighting facilities, such as fire sand and carbon dioxide fire extinguishers.
- Wear personal protective equipment and use dedicated insulated tools to avoid electric shocks or short circuits.

WARNING

- Device damage caused by incorrect cable connections is not covered by the product warranty.
- Only professional electrical technicians are allowed to perform electrical connection operations.
- Operation personnel must wear PPE when connecting cables.
- Before connecting cables to ports, leave enough slack to reduce the tension on the cables and prevent poor cable connections.

Copyright © Huawei Technologies Co., Ltd.

CAUTION

- Stay away from the equipment when preparing cables to prevent cable scraps from entering the equipment. Cable scraps may cause sparks and result in personal injury and equipment damage.

NOTE

The cable colors shown in the electrical connection diagrams provided in this section are for reference only. Select cables in accordance with local cable specifications (green-and-yellow cables are only used for protective earthing).

5.2 Preparing Cables

Figure 5-1 SUN2000 cable connections (the components in dashed boxes are optional)

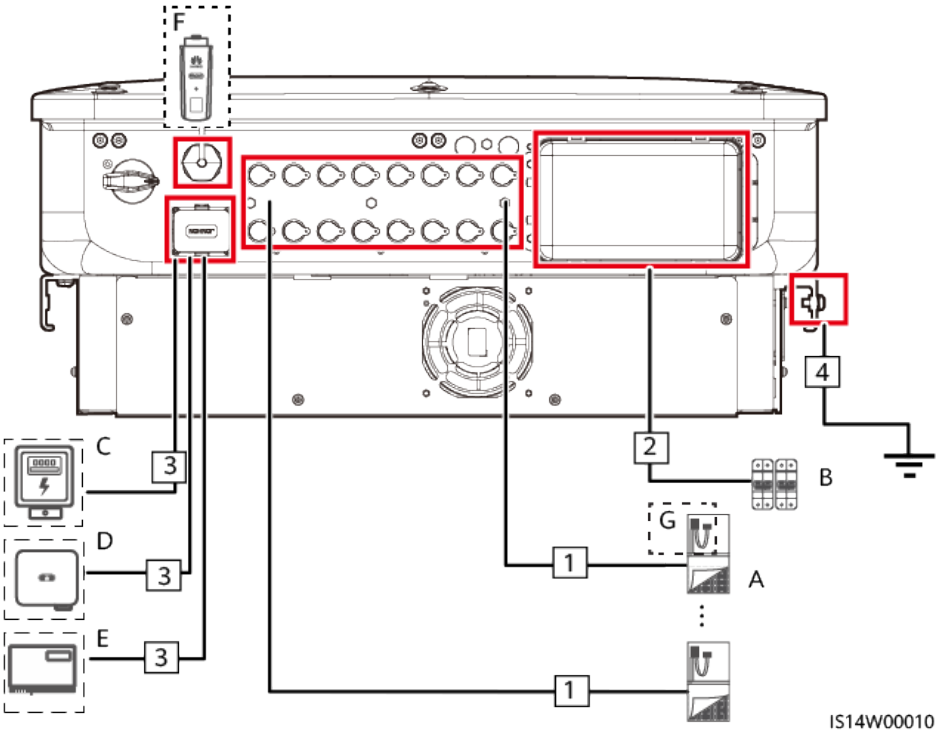

Table 5-1 Component description

No.	Component	Description	Source
A	PV string	• A PV string consists of PV modules connected in series. • The inverter supports eight PV string inputs.	Prepared by the customer

No.	Component	Description	Source
B	AC switch	To ensure that the inverter can be safely disconnected from the power grid when an exception occurs, connect an AC switch to the AC side of the inverter. Select an appropriate AC switch in accordance with local industry standards and regulations. Huawei recommends the following switch specifications: Three-phase AC circuit breaker with a rated voltage greater than or equal to 500 V AC and a rated current of 125 A	Prepared by the customer
C	Power meter[1]	Supported meter models: DTSU666-H, DTSU666-HW, YDS60-80, YDS60-C24, DTSU71, DHSU1079-CT, DHSU1079-ZT, and DTSU71C[2]	Purchased from Huawei
D	SUN2000	Select a proper model as required.	Purchased from Huawei
E	SmartLogger	SmartLogger3000, SmartLogger5000B, or SmartMGC5000B	Purchased from Huawei
F	Smart Dongle	Select a proper model as required.	Purchased from Huawei
G	Smart PV Optimizer[3]	MERC-1300W-P, MERC-1100W-P	Purchased from Huawei

Note [1]: For details about how to operate the power meter, see **DTSU666-HW Smart Power Sensor Quick Guide**, **YDS60-80 Smart Power Sensor Quick Guide**, **YDS60-C24 Smart Power Sensor Quick Guide**, or **DTSU666-H 100 A and 250 A Smart Power Sensor User Manual**.

Note [2]: SUN2000MC V200R023C00SPC100 and later versions can be connected to DTSU666-HW and YDS60-80 power meters. SUN2000MC V200R023C00SPC121 and later versions can be connected to DTSU71, DHSU1079-CT, DHSU1079-ZT, and DTSU71C power meters.

Note [3]: SUN2000MC V200R023C00SPC100 and later versions can be connected to optimizers. For details about optimizer operations, see **MERC-(1300W, 1100W)-P Smart PV Optimizer User Manual**.

 Copyright © Huawei Technologies Co., Ltd.

NOTICE

Cable specifications must meet the requirements in local standards. Device damage caused by using cables with incorrect specifications will not be covered by the warranty.

Table 5-2 Cable description

No.	Cable	Type	Recommended Specifications	Source
1	DC input power cable	PV cable that meets the 1100 V standard	• Conductor cross-sectional area: 4–6 mm^2 • Cable outer diameter: 5.5–9 mm	Prepared by the customer
2	AC output power cable	Outdoor copper/aluminum cable	• Conductor cross-sectional area: 25–50 mm^2 outdoor copper cable/35–50 mm^2 outdoor aluminum cable[1] • Cable outer diameter: 16–38 mm	Prepared by the customer
3	(Optional) Signal cable	Outdoor shielded twisted pair cable (recommended model: DJYP2VP2-2x2x0.75)	• Conductor cross-sectional area: 0.2–1 mm^2 • Cable outer diameter: 4–11 mm	Prepared by the customer
4	PE cable	Single-core outdoor copper cable	Conductor cross-sectional area: ≥ 16 mm^2	Prepared by the customer
Note [1]: Five-core cables with a cross-sectional area of 5 x 35 mm^2 or 5 x 50 mm^2 are not supported.				

NOTE

The factors that affect cable selection include the rated current, cable type, routing mode, ambient temperature, and maximum expected line loss.

 Copyright © Huawei Technologies Co., Ltd.

5.3 Connecting a PE Cable

DANGER

- Ensure that the PE cable is securely connected. Otherwise, electric shocks may occur.
- Do not connect the neutral wire to the enclosure as a PE cable. Otherwise, electric shocks may occur.

NOTE

- The PE point at the AC output port is used only as a PE equipotential bonding point, and cannot substitute for the PE point on the enclosure.
- It is recommended that silicone grease or paint be applied around the ground terminal after the PE cable is connected.

Procedure

Step 1 Crimp an OT terminal.

NOTICE

- Avoid scratching the core wire when stripping a cable.
- The cavity formed after the conductor crimp strip of the OT terminal is crimped must wrap the core wire completely. The core wire must make close contact with the OT terminal.
- Wrap the wire crimping area with heat shrink tubing or insulation tape. The heat shrink tubing is used as an example.
- Use a heat gun carefully to avoid heat damage to the equipment.

Figure 5-2 Crimping an OT terminal

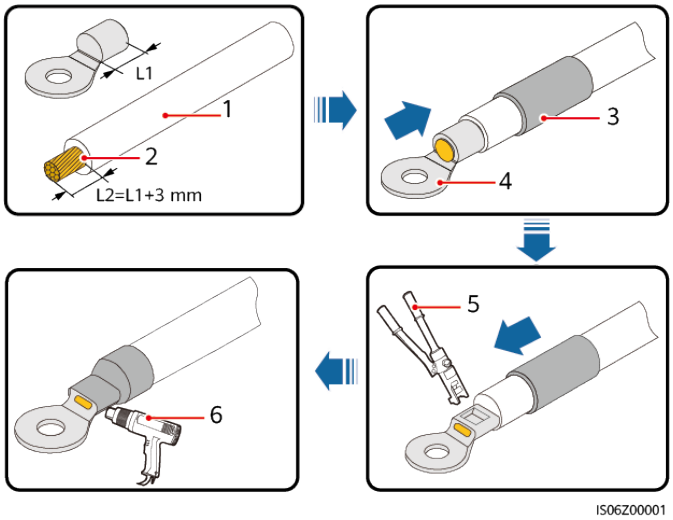

Copyright © Huawei Technologies Co., Ltd.

(1) Cable	(2) Core wire	(3) Heat shrink tubing
(4) OT terminal	(5) Crimping tool	(6) Heat gun

Step 2 Connect the PE cable.

Figure 5-3 Connecting a PE cable

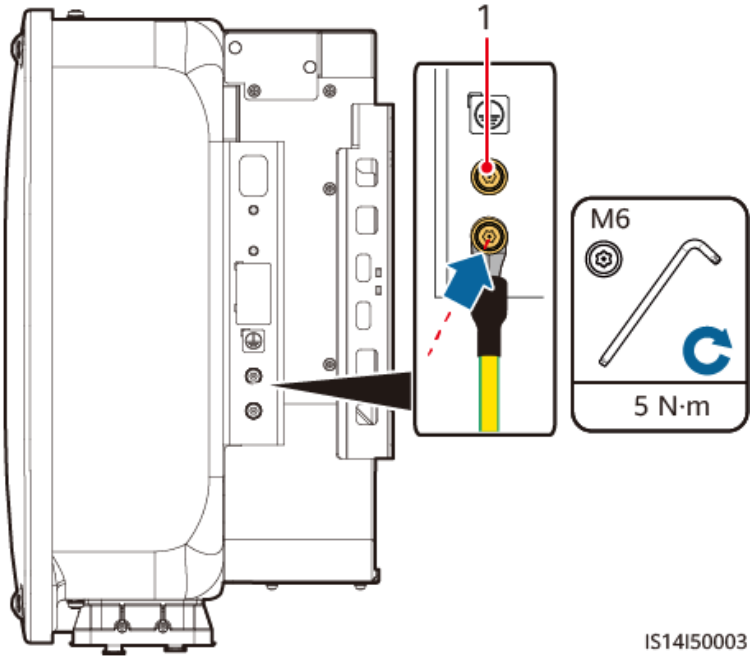

(1) Standby PE point

----End

5.4 Connecting an AC Output Power Cable

Precautions

An AC switch must be installed on the AC side of the inverter to ensure that the inverter can be safely disconnected from the power grid.

WARNING

- Do not connect loads between an inverter and an AC switch that directly connects to the inverter. Otherwise, the switch may trip by mistake.
- If an AC switch is used with specifications beyond local standards, regulations, or the Company's recommendations, the switch may fail to turn off in a timely manner in case of exceptions, causing serious faults.

CAUTION

Each inverter shall be equipped with an AC output switch. Multiple inverters shall not connect to the same AC switch.

Cables must be vertically routed into the maintenance compartment, PV terminals, and other wiring terminals to avoid damage caused by horizontal stress on the terminals, which is not covered under the warranty.

NOTICE

- If the external AC switch provides the leakage protection function, the rated residual operating current must be greater than or equal to 500 mA.
- If multiple inverters are connected to the master leakage protection device through their external AC switches, the rated residual operating current of the device must be greater than or equal to the number of inverters x 500 mA.
- Use a socket wrench and extension rod to connect the AC power cable. The extension rod must be at least 100 mm long.
- Reserve sufficient slack for the PE wire to ensure that the PE wire is the last cable bearing the force when the AC output power cable is subject to a pulling force due to force majeure.
- Do not install third-party devices in the AC connection box.
- You need to prepare M8 OT terminals by yourself.
- In the MBUS communication scenario, if the SmartLogger3000 is used, you are advised to use multi-core cables with the maximum communication distance of 1000 m. To use other types of AC power cables, contact local technical support.
- In the MBUS communication scenario, if the SmartLogger5000B or SmartMGC5000B is used, use multi-core cables with the maximum communication distance of 500 m. To use other types of AC power cables, contact local technical support.

 Copyright © Huawei Technologies Co., Ltd.

Wiring Area

Figure 5-4 Wiring ports

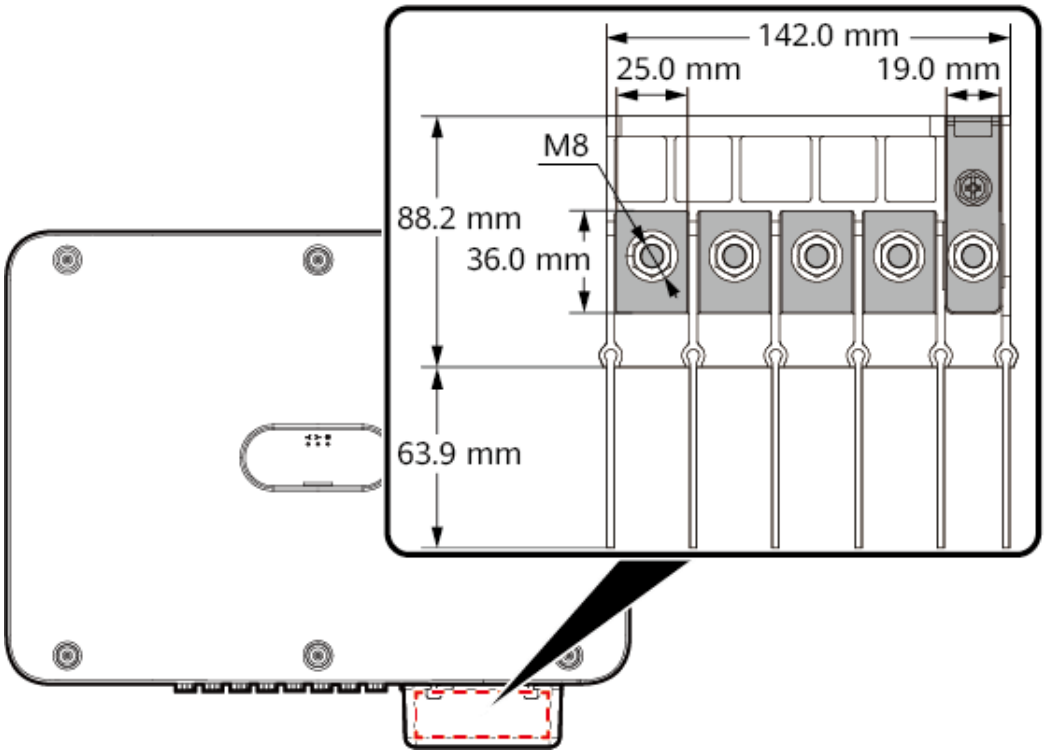

Figure 5-5 Specifications of the crimped OT/DT terminal

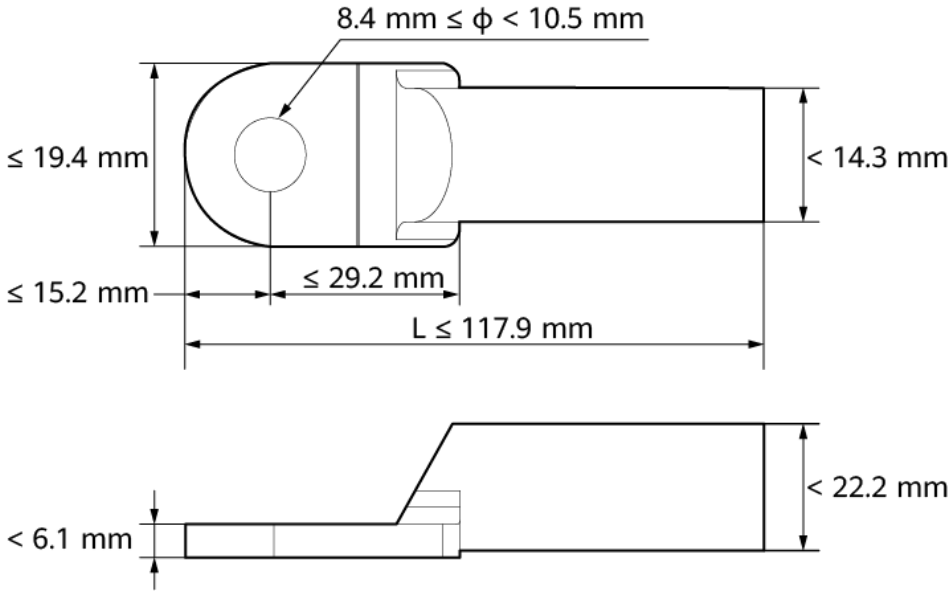

Requirements for the OT or DT Terminal

- If a copper cable is used, use copper wiring terminals.
- If a copper-clad aluminum cable is used, use copper wiring terminals.

- If an aluminum alloy cable is used, use copper-aluminum transition wiring terminals, or aluminum wiring terminals along with copper-aluminum transition spacers.

NOTICE

- Do not connect aluminum wiring terminals to the AC terminal block. Otherwise the electrochemical corrosion will occur and affect the reliability of cable connections.
- Comply with the IEC61238-1 requirements when using copper-aluminum transition wiring terminals, or aluminum wiring terminals along with copper-aluminum transition spacers.
- If copper-aluminum transition spacers are used, pay attention to the front and rear sides. Ensure that the aluminum sides of spacers are in contact with aluminum wiring terminals, and copper sides of spacers are in contact with the AC terminal block.

Figure 5-6 Requirements for the OT/DT terminal

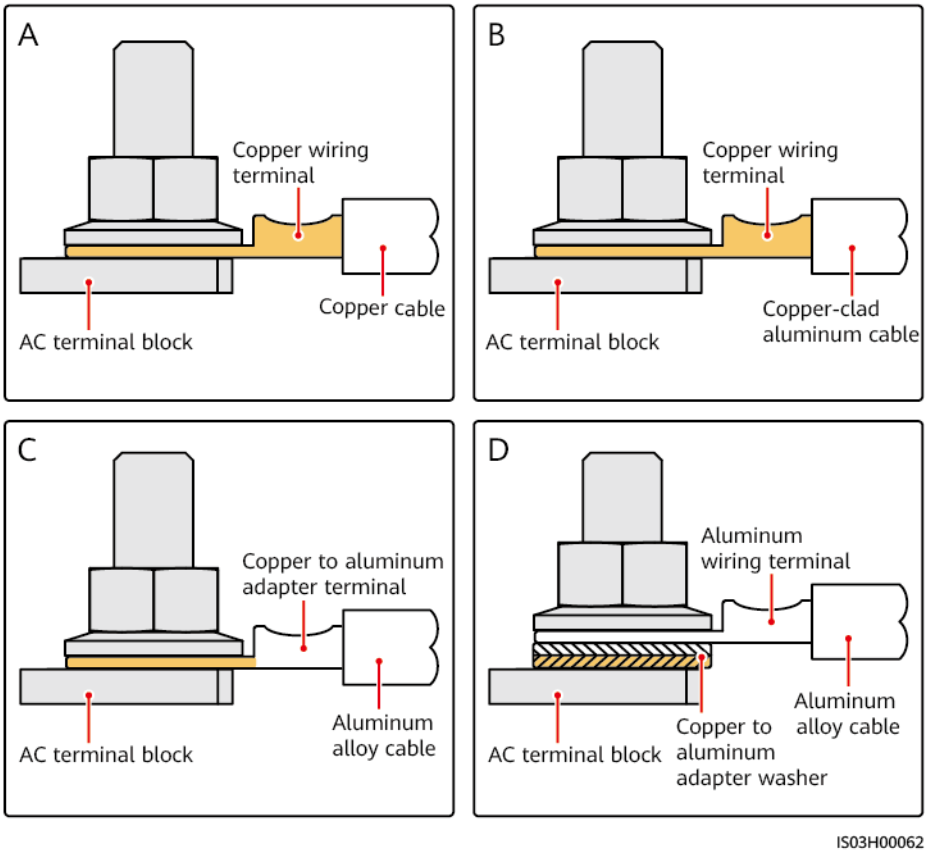

Procedure

Step 1 Remove the AC terminal box and install partition boards.

NOTICE

To remove the AC terminal box, do as follows:

Method 1: Press the two buckles at the front of the AC terminal box respectively with both thumbs. Rotate the AC terminal box counterclockwise and remove it.

Method 2: Press either of the buckles at the front of the AC terminal box with both thumbs, and then press the other buckle. Rotate the box counterclockwise and remove it.

Figure 5-7 Removing the AC terminal box

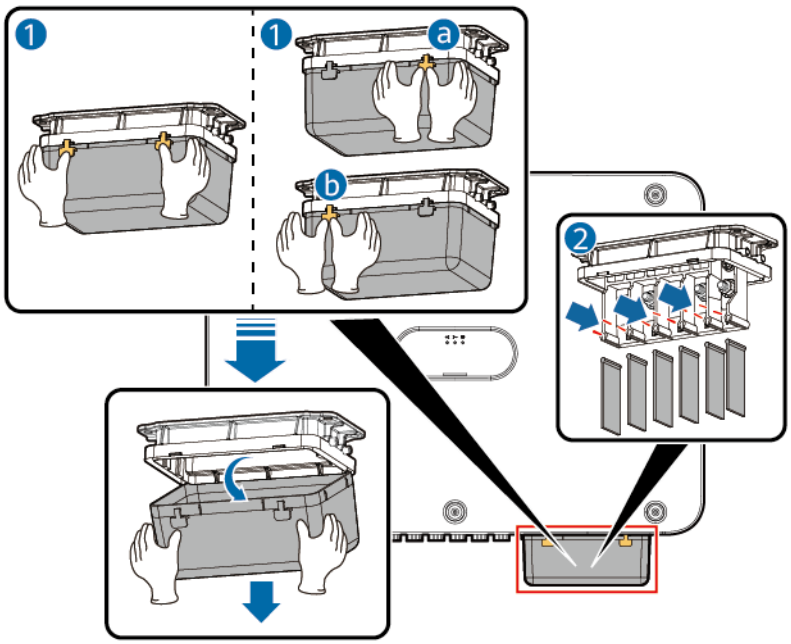

Step 2 Connect the AC output power cable.

NOTE

- Do not route a cable with a crimped OT terminal directly through the rubber liner. Otherwise, the liner may be damaged.
- Reserve sufficient slack for the PE wire to ensure that the PE wire is the last cable bearing the force when the AC output power cable is subject to a pulling force due to force majeure. It is recommended that the stripping length of the PE cable be 15 mm longer than that of other cables.
- The cable colors shown in the figures are for reference only. Select an appropriate cable according to the local standards.

 Copyright © Huawei Technologies Co., Ltd.

Figure 5-8 Stripping an AC power cable (using a five-core cable as an example)

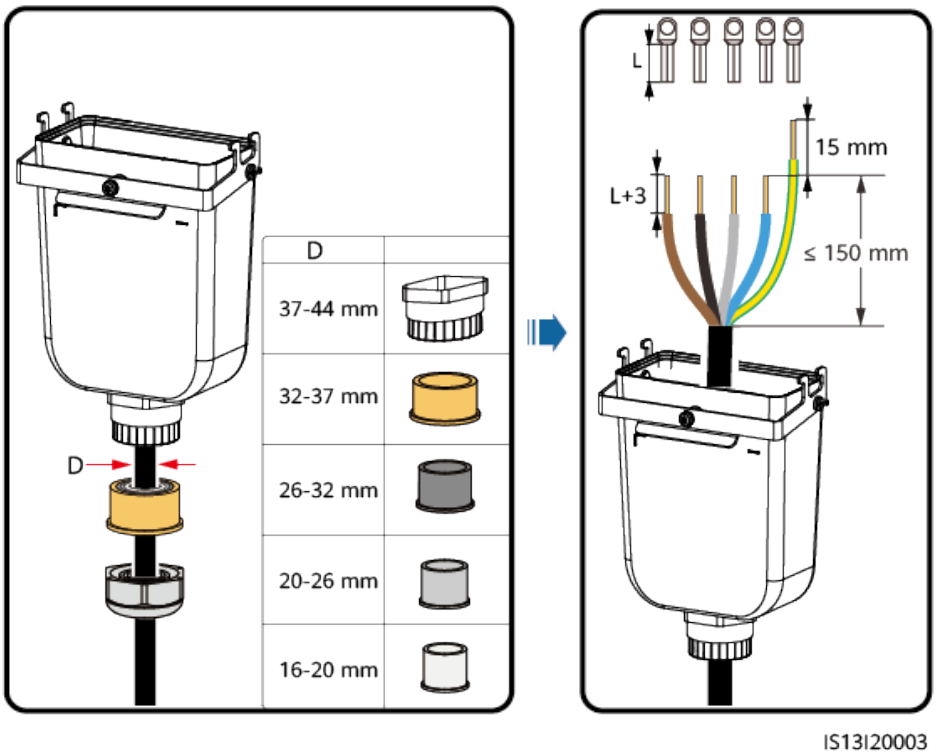

Figure 5-9 Five-core cable (L1, L2, L3, N, and PE)

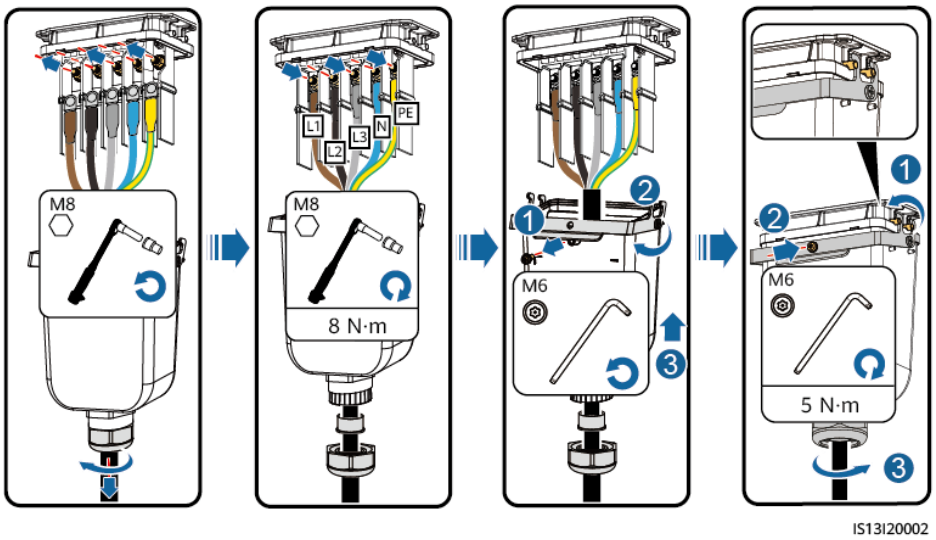

Copyright © Huawei Technologies Co., Ltd.

Figure 5-10 Four-core cable (L1, L2, L3, and PE)

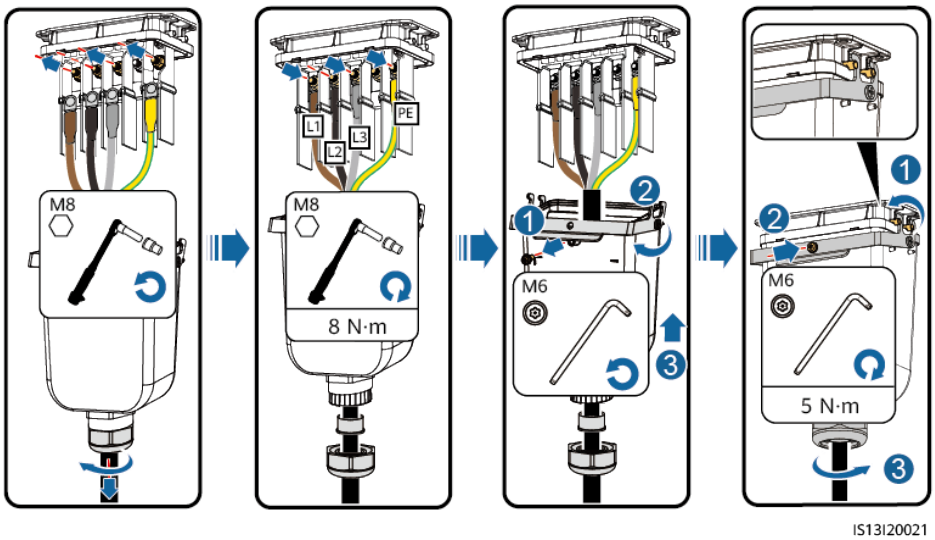

Figure 5-11 Four-core cable (L1, L2, L3, and N)

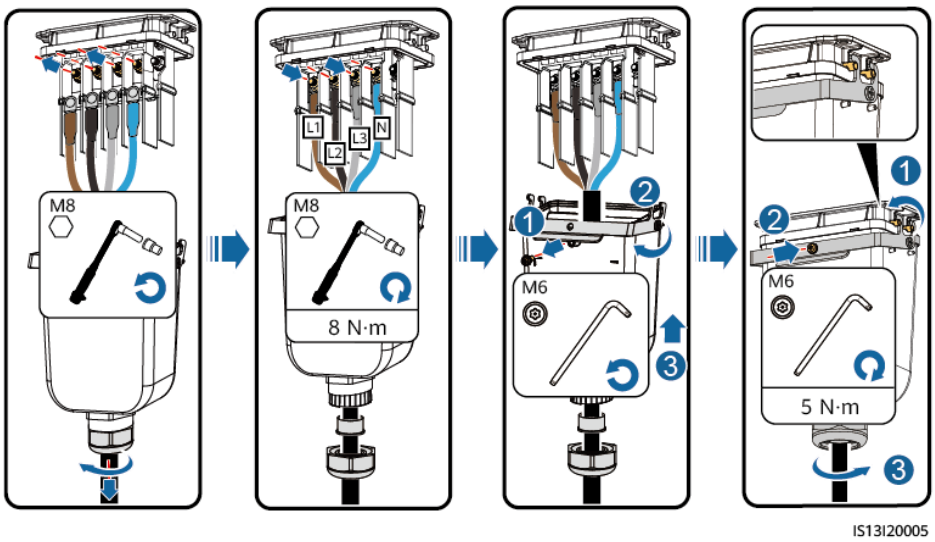

Copyright © Huawei Technologies Co., Ltd.

Figure 5-12 Three-core cable (L1, L2, and L3)

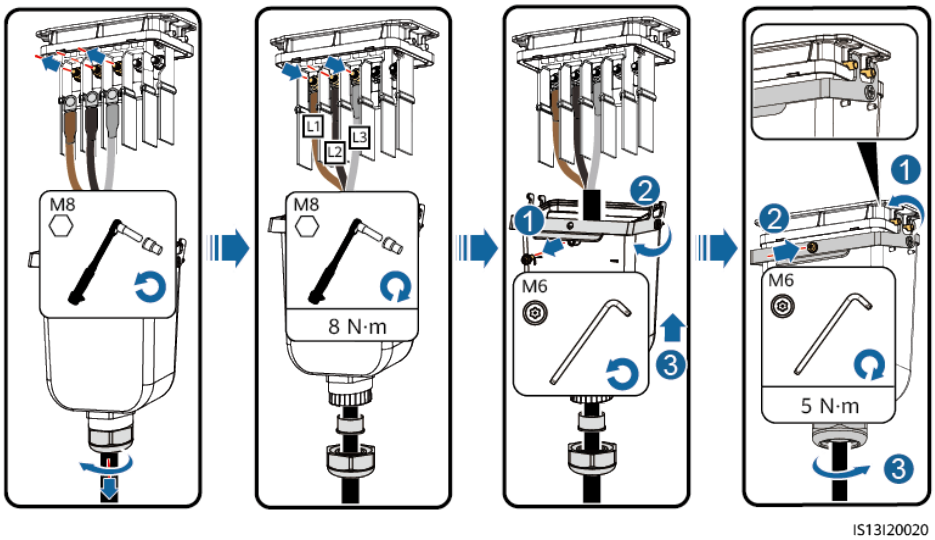

Figure 5-13 Wiring requirements

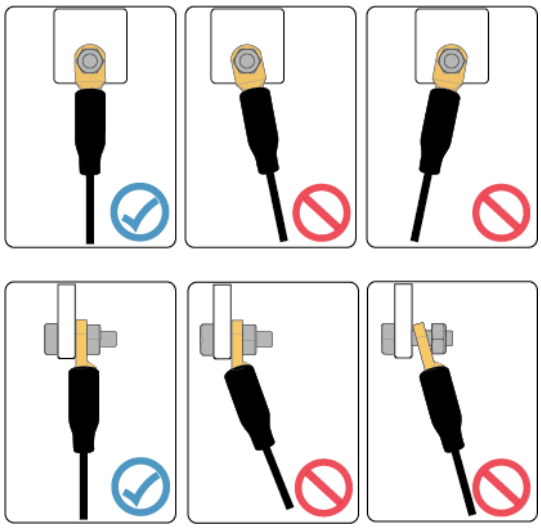

----End

5.5 Connecting DC Input Power Cables

5.5.1 Cable Connection Description

Precautions

DANGER

- Before connecting the DC input power cables, ensure that the DC voltage is within the safe range (lower than 60 V DC) and that the **DC SWITCH** on the inverter is **OFF**. Otherwise, the high voltage may result in electric shocks.
- When the inverter is operating, do not perform maintenance or operations on the DC input power cables, such as connecting or disconnecting a PV string or a PV module in the PV string. Otherwise, electric shocks may occur.
- If no PV string connects to a DC input terminal of the inverter, do not remove the waterproof cap from the DC input terminal. Otherwise, the protection level of the inverter will decrease.

WARNING

Ensure that the following conditions are met. Otherwise, the inverter may be damaged or even a fire may occur.

- PV modules connected in series in each PV string are of the same specifications.
- According to IEC 62548, the maximum open-circuit voltage of each PV string cannot exceed 1100 V DC at the lowest average annual dry-bulb temperature.
- The polarities of electrical connections must be correct on the DC input side. The positive and negative terminals of a PV string must be connected to corresponding positive and negative DC input terminals of the inverter.
- If a DC input power cable is connected in reverse polarity, do not immediately operate on the **DC SWITCH** or positive and negative connectors. Wait until the night when solar irradiance declines and the PV string current drops to below 0.5 A. Then set the **DC SWITCH** to **OFF**, remove the positive and negative connectors, and correct the polarities of the DC input power cable.

WARNING

During the installation of PV strings and the inverter, the positive or negative terminals of PV strings may be short-circuited to ground if the power cables are not properly installed or routed. In this case, an AC or DC short circuit may occur and damage the inverter. The resulting device damage is not covered under any warranty.

 Copyright © Huawei Technologies Co., Ltd.

CAUTION

Take waterproof and insulation measures for unused DC power cables to avoid personal injury or property loss caused by accidental contact with high voltage or other reasons.

NOTICE

- The inverter does not support power supplies other than PV strings. The output of the PV string connected to the inverter cannot be grounded. Ensure that the PV module output is well insulated to ground.
- To maximize energy yield, the voltage difference between MPPTs shall be less than 85 V if no optimizer is configured. If optimizers are configured, refer to the optimizer user manual.

Figure 5-14 DC input terminals

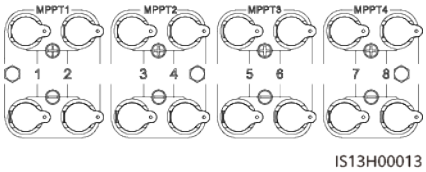

If not all DC input terminals need to be connected, the terminal selection must meet the following requirements:

1. Evenly distribute the DC input power cables on the four MPPTs and preferentially connect them from MPPT 1 to MPPT 4.
2. Maximize the number of connected MPPT circuits.

Quantity of PV Strings	Terminal Selection	Quantity of PV Strings	Terminal Selection
1	PV1	2	PV1, PV7
3	PV1, PV3, PV7	4	PV1, PV3, PV5, PV7
5	PV1, PV2, PV3, PV5, PV7	6	PV1, PV2, PV3, PV5, PV7, PV8
7	PV1, PV2, PV3, PV4, PV5, PV7, PV8	8	PV1, PV2, PV3, PV4, PV5, PV6, PV7, PV8

 Copyright © Huawei Technologies Co., Ltd.

5.5.2 Measuring the Insulation Resistance of PV Strings to the Ground

NOTICE

In a PV system, the insulation resistance of a PV string reflects the insulation status between the PV string and the ground. A low insulation resistance indicates poor insulation performance, which may cause personal safety and inverter performance problems. Therefore, before connecting PV strings to the inverter, measure the insulation resistance of each PV string to the ground and check that the insulation resistance is normal to ensure normal operation of the inverter.

5.5.2.1 Optimizers Configured

Prerequisites

Set a multimeter to the DC position and use it to measure the voltage between the positive and negative terminals of a PV string. If the voltage is a negative value, the positive and negative terminals are connected in reverse polarity. Rectify the connection.

Procedure

Step 1 Connect the positive and negative output connectors of a PV string to a branch cable, and use an insulation resistance tester to measure the insulation resistance of the PV string cable to the ground: Add a maximum of 1500 V DC voltage between the cable and the ground, and check the insulation resistance.

Figure 5-15 Measuring the insulation resistance of each PV string

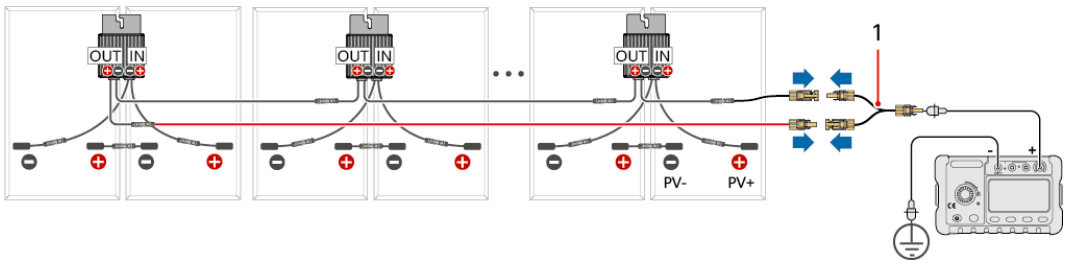

(1) Branch cable

If...	Then...
Insulation resistance ≥ 1 MΩ	The PV string is normal.
Insulation resistance < 1 MΩ	You need to check the insulation of the cable or PV string. Go to **Step 2**.

Step 2 Disconnect the extension cable from the optimizer. Connect the extension cable to the branch cable and use an insulation resistance tester to measure the insulation resistance of the extension cable to the ground. Add a maximum of 1500 V DC voltage between the cable and the ground, and check the insulation resistance.

Figure 5-16 Measuring the insulation resistance of the extension cable

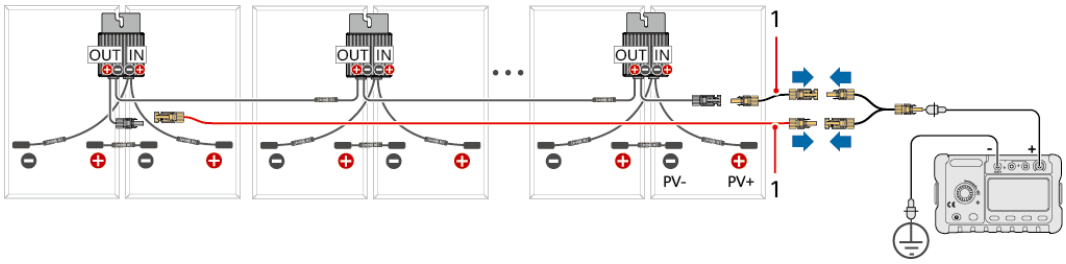

(1) Extension cable

If...	Then...
Insulation resistance ≥ 1 MΩ	The extension cable is normal. Go to **Step 3**.
Insulation resistance < 1 MΩ	The extension cable is abnormal. Check the cable. After the check is completed, go to **Step 1** to check whether the PV string is normal. If the PV string is abnormal, go to **Step 3**.

Step 3 Disconnect the suspected faulty PV module and the paired optimizer from the PV string. Keep the optimizer connected to the PV module and measure their insulation resistance to the ground.

Figure 5-17 Measuring the insulation resistance of a PV module and the paired optimizer

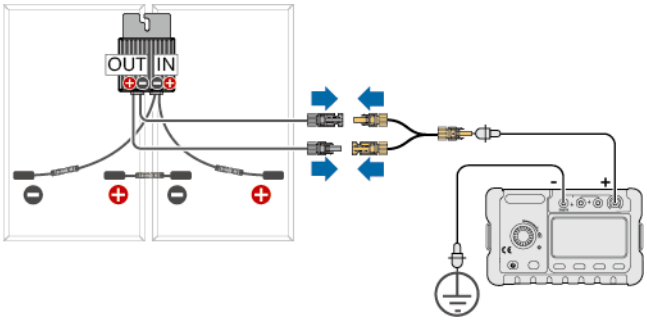

If...	Then...
Insulation resistance ≥ 1 MΩ	If the disconnected optimizer and PV module are normal, perform **Step 3** for another PV module and the paired optimizer.
Insulation resistance < 1 MΩ	The optimizer, PV module, or both are faulty. Go to **Step 4** for troubleshooting.

Step 4 Check whether the PV module or optimizer is faulty by measuring each component separately:

1. Disconnect the PV module from the optimizer.
2. Connect the positive and negative output connectors of the optimizer to a branch cable, and then connect the cable to the positive probe of the insulation resistance tester. Connect the negative probe of the insulation resistance tester to the ground. Measure the insulation resistance of the optimizer to the ground.

Figure 5-18 Measuring the insulation resistance of an optimizer

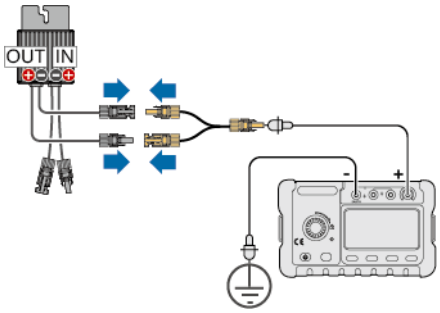

If...	Then...
Insulation resistance ≥ 1 MΩ	The optimizer is normal, but the PV module is faulty.
Insulation resistance < 1 MΩ	The optimizer is faulty. After replacing the optimizer, check whether the PV module is also faulty.

3. Measure the insulation resistance of the PV module. You are advised to consult the PV module manufacturer to determine whether the PV module is abnormal.

NOTE

For a PV module without an optimizer, you do not need to use a branch cable to connect PV+ and PV–. Instead, measure the insulation resistance at the positive and negative terminals of the PV module separately.

 Copyright © Huawei Technologies Co., Ltd.

4. Replace the faulty PV module or optimizer.

----End

5.5.2.2 Optimizers Not Configured

Prerequisites

The voltage between the positive and negative terminals of a PV string is normal.

Set a multimeter to the DC position (measurement range ≥ 1100 V) and use it to measure the voltage between the positive and negative terminals of a PV string.

If...	Then...
Voltage < 0	The positive and negative terminals are connected in reverse polarity. Rectify the connection.
Voltage > 1100 V	There are too many PV modules, which may result in inverter damage. Do not connect the inverter.

Procedure

Step 1 Use an insulation resistance tester to measure the insulation resistance of a PV– cable to the ground. Add a maximum of 1500 V DC voltage between the cable and the ground, and check the insulation resistance.

Figure 5-19 Measuring the insulation resistance of PV– for each PV string

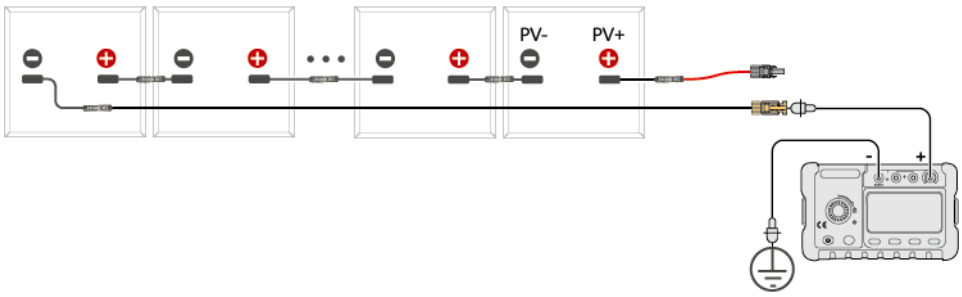

If...	Then...
Insulation resistance ≥ 1 MΩ	This is normal.
Insulation resistance < 1 MΩ	You need to check the insulation of the cable or PV string. Go to **Step 2**.

NOTE

You can prepare a tool to connect all PV– cables together using a conversion adapter and measure the ground insulation resistance of all PV– cables of an inverter at a time.

Figure 5-20 Measuring the insulation resistance of PV– for all PV strings

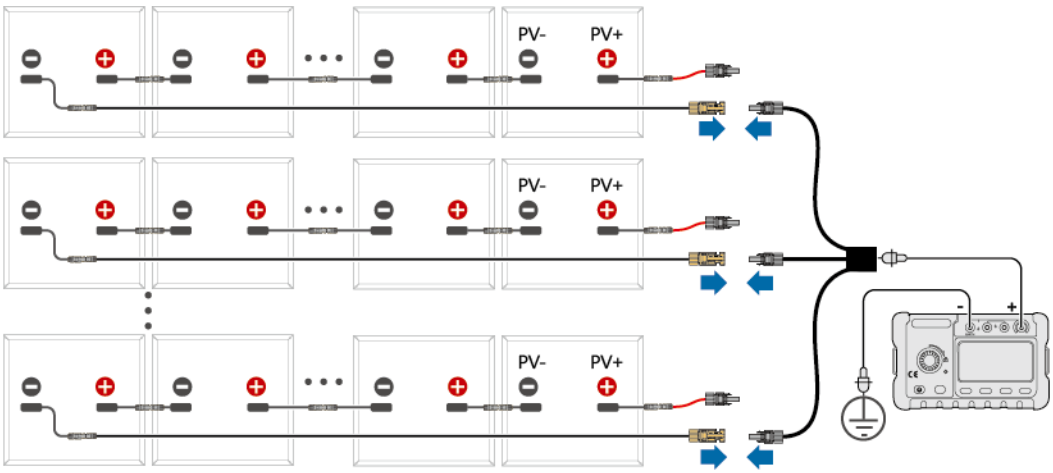

If...	Then...
Insulation resistance ≥ 1 MΩ	This is normal.
Insulation resistance < 1 MΩ	You need to check the insulation of the cables or PV strings.

Step 2 Disconnect the extension cable from the PV string. Connect the extension cable to the branch cable and use an insulation resistance tester to measure the insulation resistance of the extension cable to the ground. Add a maximum of 1500 V DC voltage between the cable and the ground, and check the insulation resistance.

Figure 5-21 Measuring the insulation resistance of the extension cable

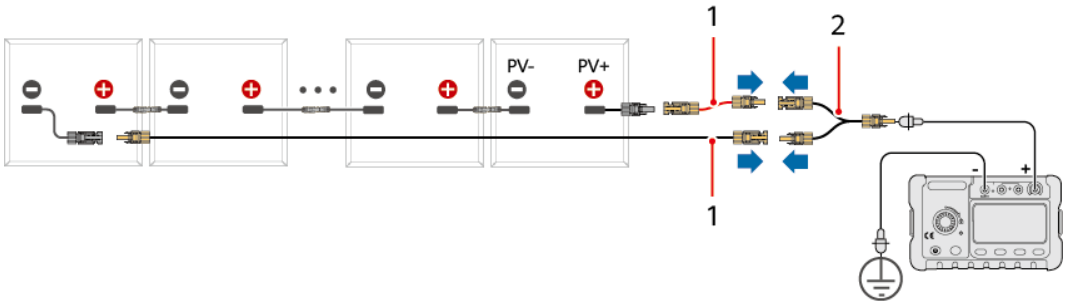

(1) Extension cable (2) Branch cable

 Copyright © Huawei Technologies Co., Ltd.

If...	Then...
Insulation resistance ≥ 1 MΩ	The extension cable is normal. Go to **Step 3**.
Insulation resistance < 1 MΩ	The extension cable is abnormal. Check the cable. After the check is completed, go to **Step 1** to check whether the PV string is normal. If the PV string is abnormal, go to **Step 3**.

Step 3 Measure the insulation resistance of the PV module. You are advised to consult the PV module manufacturer to determine whether the PV module is abnormal.

----End

5.5.3 Connecting Cables to Amphenol Helios H4 Terminals

Procedure

Step 1 Connect DC power cables.

CAUTION

Use the Amphenol Helios H4 positive and negative metal terminals and DC connectors delivered with the inverter. Using incompatible positive and negative metal terminals and DC connectors may result in serious consequences. The resulting device damage is not covered by the product warranty.

NOTICE

- You are advised to use the H4TC0003 (Amphenol) crimping tool and do not use it with the positioning block. Otherwise, the metal terminals may be damaged.
- The H4TW0001 (Amphenol) open-end wrench is recommended.
- Cables with high rigidity, such as armored cables, are not recommended as DC input power cables, because poor contact may be caused by the bending of the cables.
- Before assembling DC connectors, label the cable polarities correctly to ensure correct cable connections.
- After the positive and negative connectors snap into place, try to pull the DC input power cables back to check that they are secure.

 Copyright © Huawei Technologies Co., Ltd.

Figure 5-22 Connecting DC power cables

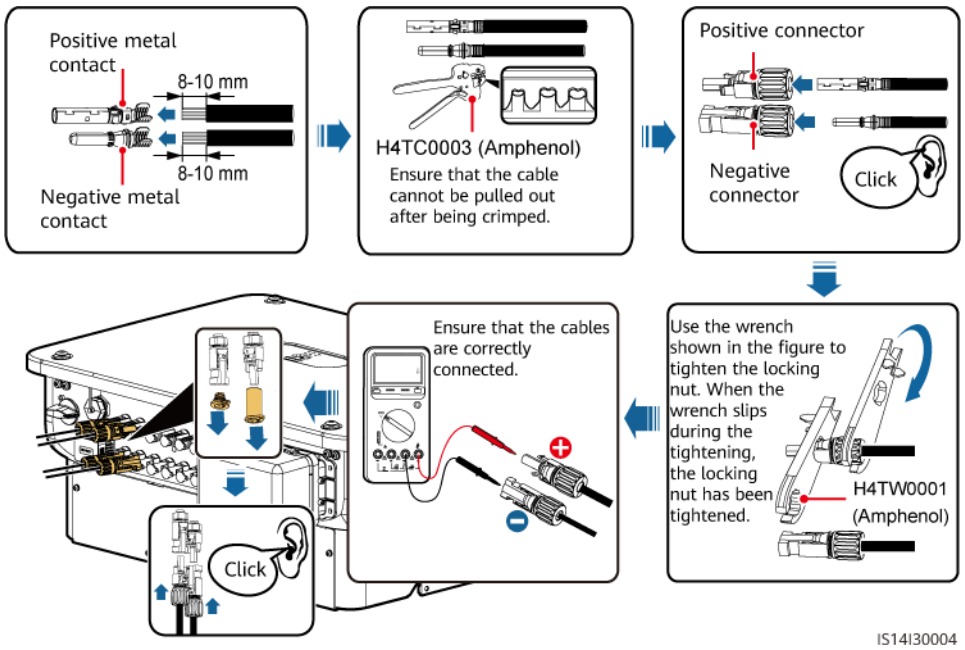

NOTICE

When installing DC input power cables, leave at least 150 mm of slack. The axial tension on PV connectors must not exceed 80 N. Radial stress or torque must not be generated on PV connectors.

Step 2 Use sealing plugs to seal the DC input terminals that are not connected to PV strings. Device damage caused by the absence of sealing plugs is not covered by the warranty.

Figure 5-23 Sealing plugs

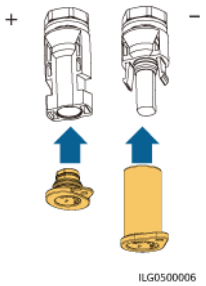

Table 5-3 Sealing plug models

PV+ Sealing Plug	PV– Sealing Plug
CT75A-FJB9-01	CT75A-FJB8-01
HH4SPM	HH4SPF
102-01-00064	102-01-00065

 Copyright © Huawei Technologies Co., Ltd.

PV+ Sealing Plug	PV– Sealing Plug
HY050-FCG-2	HY050-FCG-3

----End

5.6 (Optional) Installing the Smart Dongle

Procedure

NOTE

The Smart Dongle is not provided in standard configuration.

- 4G Smart Dongle

NOTICE

- If your Smart Dongle is not configured with a SIM card, you need to prepare one (dimensions: 25 mm x 15 mm; capacity: ≥ 64 KB).
- When installing the SIM card, determine its installation direction based on the silk screen and arrow on the card slot.
- Press the SIM card in place to lock it, indicating that the SIM card is correctly installed.
- When removing the SIM card, push it inward to eject it.
- When reinstalling the enclosure of the Smart Dongle, ensure that the snap-fits click into place.

 Copyright © Huawei Technologies Co., Ltd.

Figure 5-24 Installing the 4G Smart Dongle (SDongleB-06)

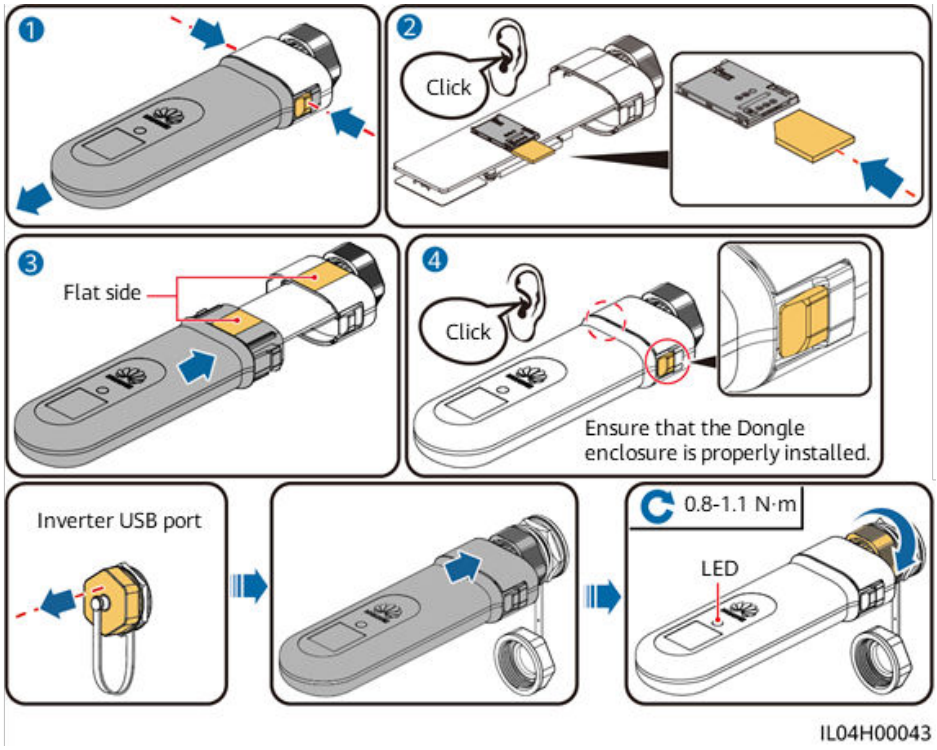

- WLAN-FE Smart Dongle (WLAN communication)

Figure 5-25 Installing the WLAN-FE Smart Dongle (WLAN communication)

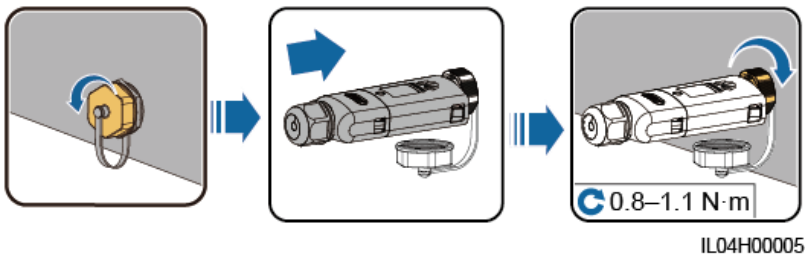

- WLAN-FE Smart Dongle (FE communication)

Figure 5-26 Installing the WLAN-FE Smart Dongle (FE communication)

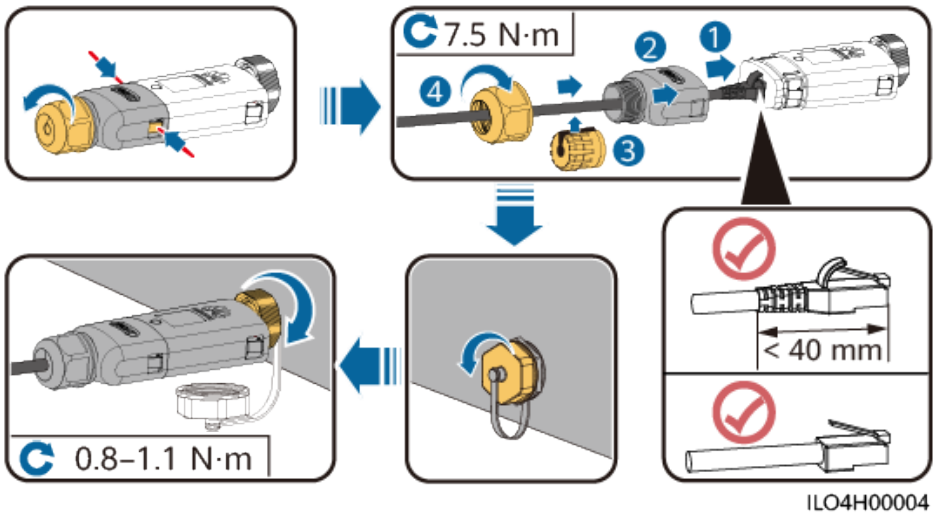

NOTICE

Install the network cable before installing the Smart Dongle on the inverter.

NOTE

- For details about how to use the WLAN-FE Smart Dongle SDongleA-05, see **SDongleA-05 Smart Dongle Quick Guide (WLAN-FE)**. You can scan the QR code below to obtain the document.
- For details about how to use the 4G Smart Dongle SDongleB-06, see **SDongleB-06 Smart Dongle Quick Guide (4G)**. You can scan the QR code below to obtain the document.

The quick guide is delivered with the Smart Dongle.

Copyright © Huawei Technologies Co., Ltd.

5.7 Connecting Signal Cables

Communications Port Pin Definitions

NOTICE

- When routing signal cables, separate them from power cables and keep them away from strong interference sources to prevent communication interruption.
- Ensure that the signal cable jacket is inside the connector and surplus core wires are cut off flush with the edge of the cable jacket. Ensure that the exposed core wires are completely inserted into the holes and the cable is securely connected.

Figure 5-27 Pin definitions

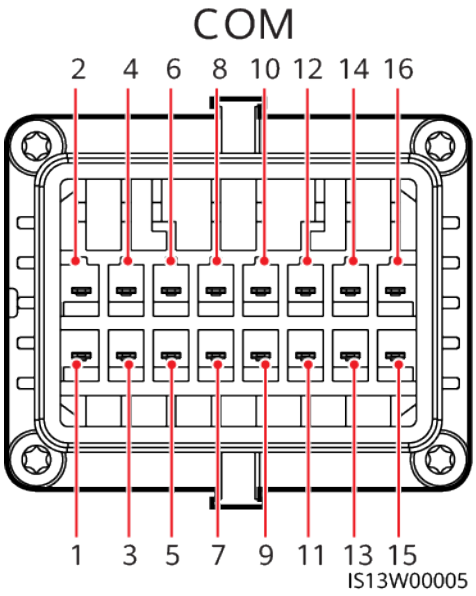

Pin	Definition	Function	Description	Pin	Definition	Function	Description
1	485A1_1	RS485 differential signal +	For inverter cascading or connecting to the RS485 signal port of a SmartLogger	2	485A1_2	RS485 differential signal +	For inverter cascading or connecting to the RS485 signal port of a SmartLogger
3	485B1_1	RS485 differential signal –		4	485B1_2	RS485 differential signal –	
5	PE	Shield layer grounding	-	6	PE	Shield layer grounding	-

Copyright © Huawei Technologies Co., Ltd.

Pin	Definition	Function	Description	Pin	Definition	Function	Description
7	485A2	RS485 differential signal +	For connecting to the RS485 signal port for controlling the power meter at the grid connection point.	8	DIN1	Dry contact for grid scheduling	-
9	485B2	RS485 differential signal –		10	DIN2		
11	-	-	-	12	DIN3		
13	GND	GND	-	14	DIN4		
15	DIN5	Rapid shutdown/NS protection	Implements the rapid shutdown and NS protection functions.	16	GND		

Scenario Where No Signal Cable Is Connected

NOTICE

If no signal cable is connected to the inverter, use a waterproof plug to seal the cable hole of the signal cable connector and connect the signal cable connector to the communications port on the inverter for better waterproof performance.

Figure 5-28 Connecting the signal cable connector

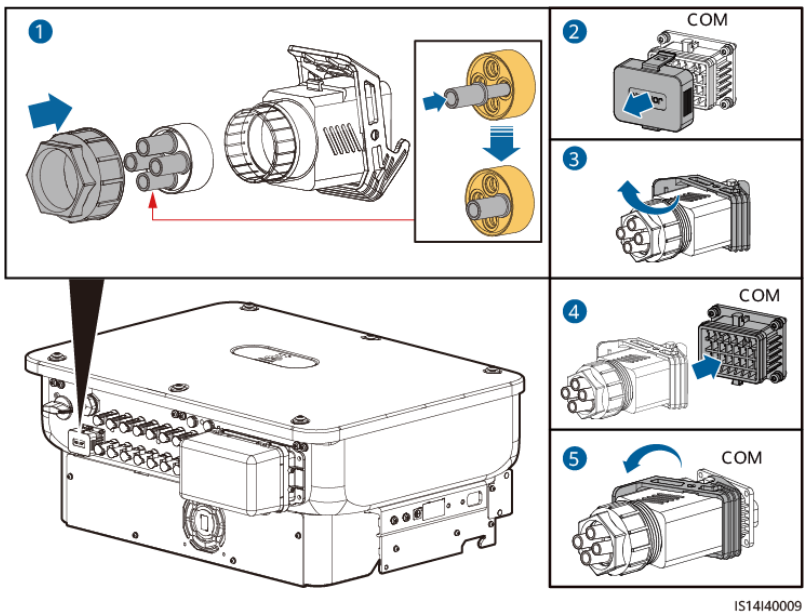

5.7.1 Communication Mode Description

RS485 Communication

- Smart Dongle networking

Figure 5-29 Smart Dongle networking

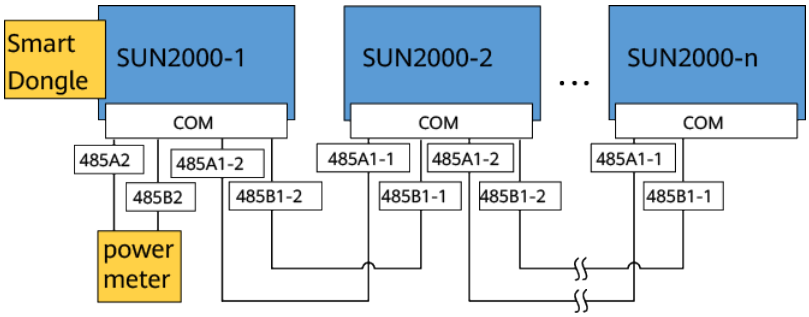

NOTE

- If the inverter is connected to the Smart Dongle, it cannot be connected to the SmartLogger.
- A maximum of 10 SUN2000s can be cascaded to the Smart Dongle.

- SmartLogger networking

Figure 5-30 SmartLogger networking

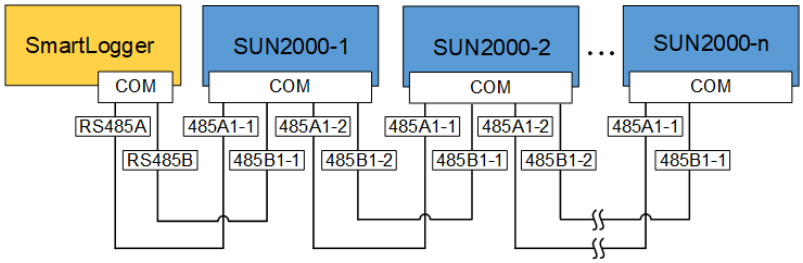

NOTE

- If the inverter is connected to the SmartLogger, it cannot be connected to the Smart Dongle.
- You are advised to connect fewer than 30 devices to each RS485 route.
- If the SmartLogger3000 is used, the RS485 communication distance between the SUN2000 at the end and the SmartLogger must be less than or equal to 1000 m (baud rate: 9600 bit/s).
- If the SmartLogger5000B or SmartMGC5000B is used, the RS485 communication distance between the SUN2000 at the end and the SmartLogger must be as follows:
  - ≤ 1000 m (baud rate: 9600 bit/s)
  - ≤ 500 m (baud rate: 38400 bit/s)

MBUS Communication

The MBUS technology transmits communication signals over power cables through a communications board.

NOTE

- The built-in MBUS module in the inverter does not need to be connected with cables.
- In utility-scale scenarios, an isolation transformer must be connected between the inverter and loads.
- Commercial & industrial (C&I) scenarios are supported only in China.
- In the MBUS communication scenario, if the SmartLogger3000 is used, you are advised to use multi-core cables with the maximum communication distance of 1000 m. To use other types of AC power cables, contact local technical support.
- In the MBUS communication scenario, if the SmartLogger5000B or SmartMGC5000B is used, use multi-core cables with the maximum communication distance of 500 m. To use other types of AC power cables, contact local technical support.

Figure 5-31 MBUS communication (utility-scale scenario)

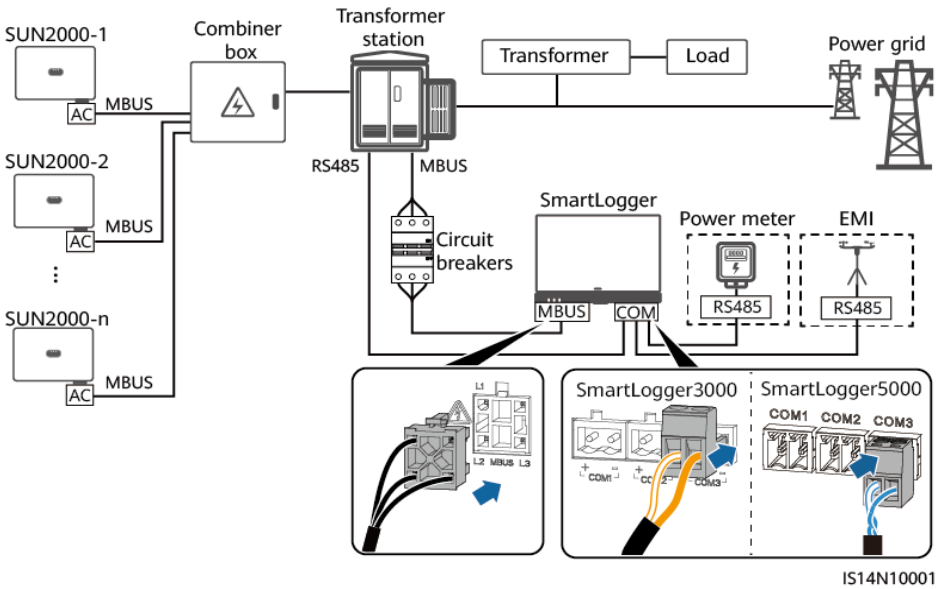

Figure 5-32 MBUS communication (C&I scenario in China)

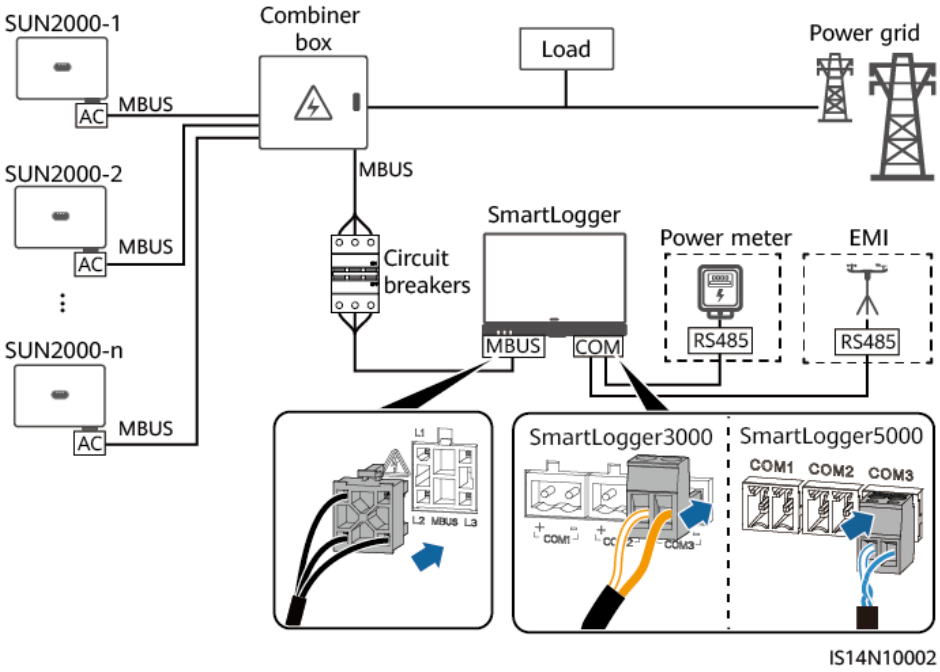

5.7.2 (Optional) Connecting the RS485 Communications Cables to the Inverter

Procedure

Step 1 Connect the signal cables to the signal cable connector.

Figure 5-33 Installing the cables

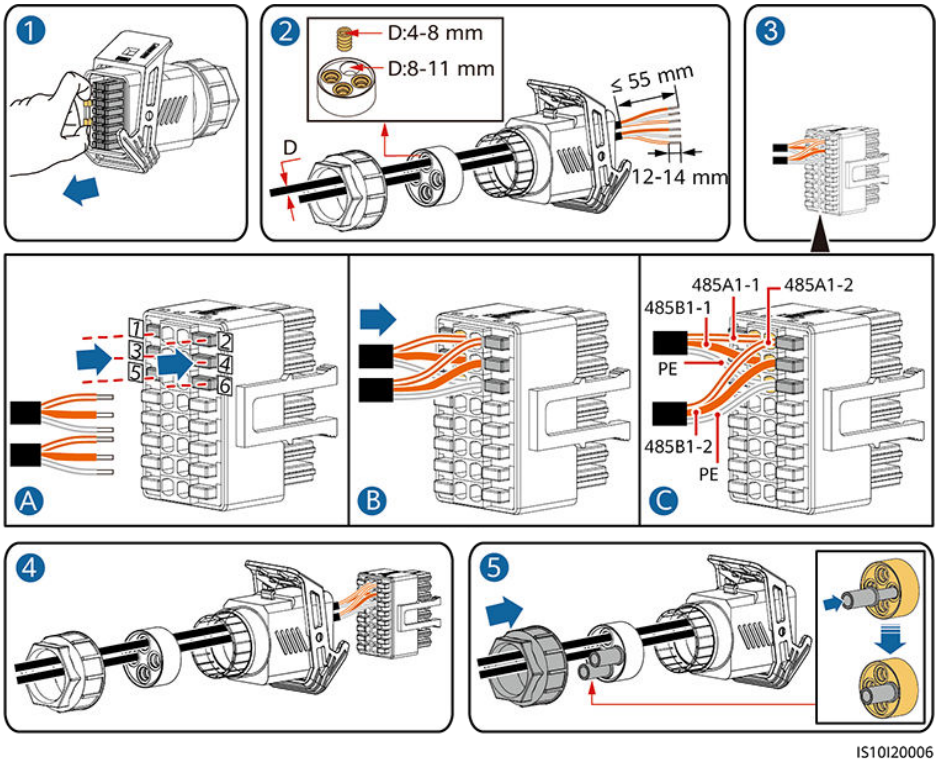

Step 2 Connect the signal cable connectors to the COM port.

Figure 5-34 Securing the signal cable connector

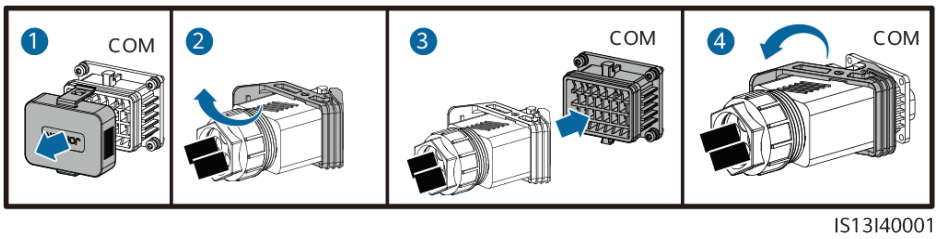

----End

5.7.3 (Optional) Connecting the RS485 Communications Cable to the Power Meter

Procedure

Step 1 Connect the signal cable to the signal cable connector.

Figure 5-35 Installing the cable

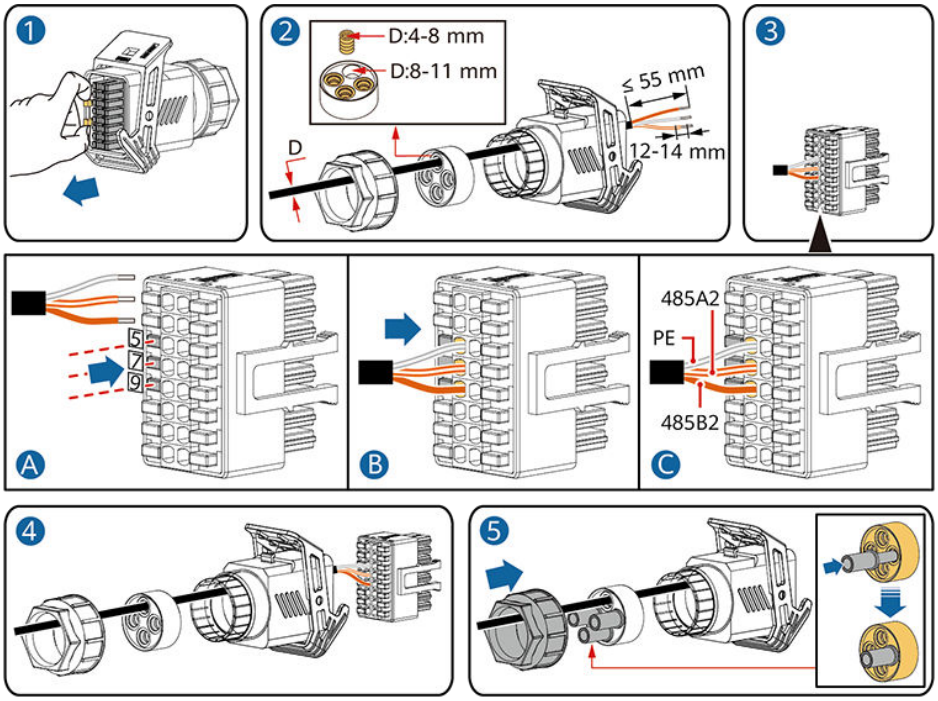

Step 2 Connect the signal cable connector to the COM port.

Figure 5-36 Securing the signal cable connector

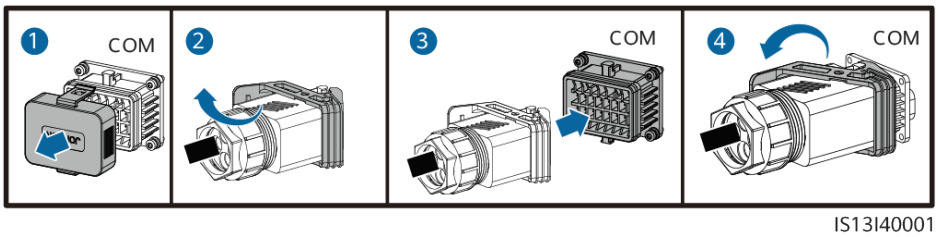

----End

5.7.4 (Optional) Connecting the Power Grid Scheduling Signal Cable

Procedure

Step 1 Connect the signal cable to the signal cable connector.

Figure 5-37 Installing the cable

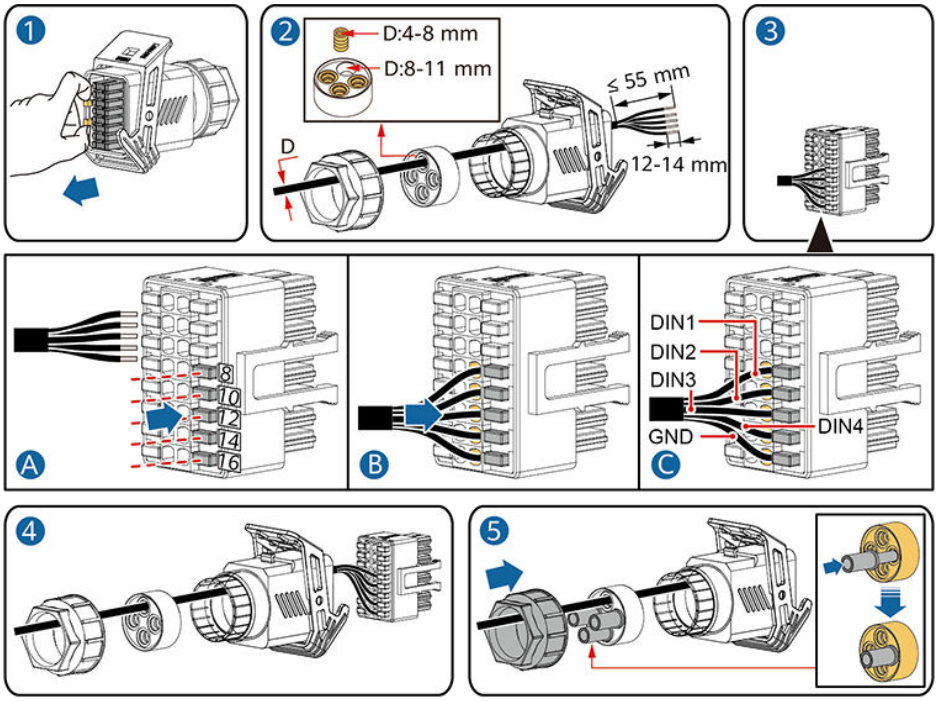

Step 2 Connect the signal cable connector to the COM port.

Figure 5-38 Securing the signal cable connector

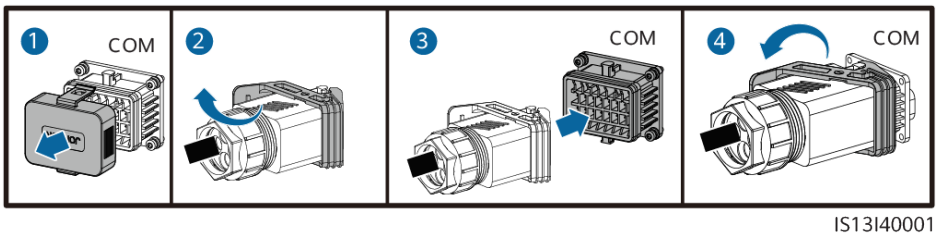

----End

5.7.5 (Optional) Connecting the Rapid Shutdown Signal Cable

Procedure

Step 1 Connect the signal cable to the signal cable connector.

Figure 5-39 Installing the cable

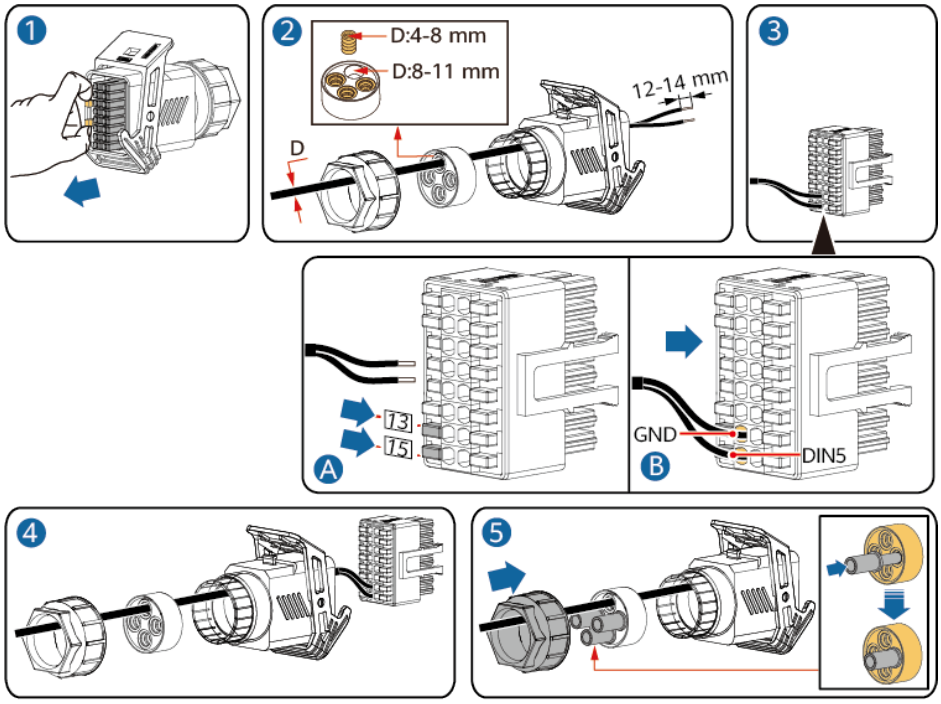

Step 2 Connect the signal cable connector to the COM port.

Figure 5-40 Securing the signal cable connector

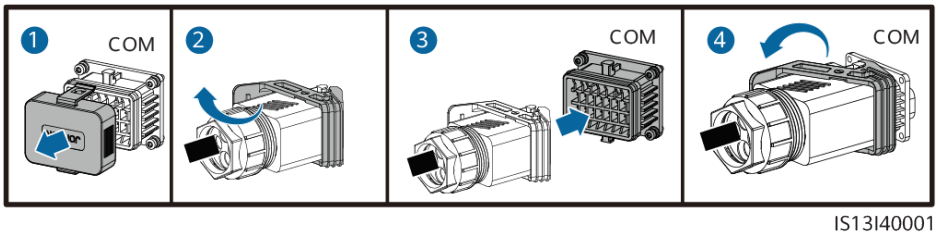

----End

6 Commissioning

DANGER

- Wear personal protective equipment and use dedicated insulated tools to avoid electric shocks or short circuits.

NOTICE

Before the equipment is put into operation for the first time, ensure that the parameters are set correctly by professional personnel. Incorrect parameter settings may result in noncompliance with local grid connection requirements and affect the normal operations of the equipment.

6.1 Checking Before Power-On

Table 6-1 Checklist

No.	Check Item	Expected Result
1	SUN2000 installation	The SUN2000 is installed correctly and securely.
2	Smart Dongle	The Smart Dongle is installed correctly and securely.
3	Cable routing	The cables are routed properly as required by the customer.
4	Cable ties	Cable ties are evenly distributed and no burr exists.
5	Reliable grounding	The PE cable is connected correctly and securely.

 Copyright © Huawei Technologies Co., Ltd.

No.	Check Item	Expected Result
6	Switch	DC switches and all the switches connecting to the SUN2000 are OFF.
7	Cable connection	The AC output power cable, and DC input power cables are connected correctly and securely.
8	Unused terminals and ports	Unused terminals and ports are locked by watertight caps.
9	Installation environment	The installation space is proper, and the installation environment is clean and tidy.

6.2 System Power-On

Prerequisites

DANGER

- Wear personal protective equipment and use dedicated insulated tools to avoid electric shocks or short circuits.

NOTICE

- Before turning on the AC switch between the inverter and the power grid, check that the AC voltage is within the specified range using a multimeter.
- If the DC power supply is connected but the AC power supply is disconnected, the inverter will report a **Grid Loss** alarm. The inverter can start properly only after the power grid recovers.

Procedure

Step 1 Turn on the AC switch between the inverter and the power grid.

Step 2 (Optional) Remove the locking screw next to the **DC SWITCH**.

Figure 6-1 Removing the DC SWITCH locking screw

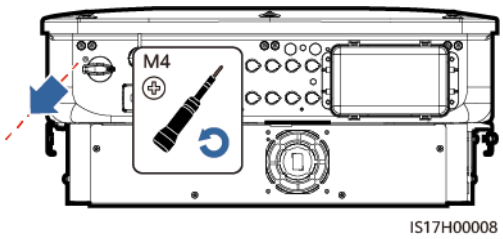

Step 3 Set the **DC SWITCH** at the bottom of the inverter to **ON**.

Step 4 Observe the LED indicators to check the operating status of the inverter.

Table 6-2 LED indicator description

Category	Status		Description
Running indicator 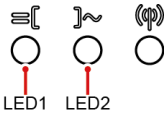	**LED1**	**LED2**	–
	Steady green	Steady green	The inverter is running in on-grid state.
	Blinking green slowly (on for 1s and off for 1s)	Off	The DC is on and the AC is off.
	Blinking green slowly (on for 1s and off for 1s)	Blinking green slowly (on for 1s and off for 1s)	Both the DC and AC are on, and the inverter is off-grid.
	Off	Blinking green slowly	The DC is off and the AC is on.
	Off	Off	Both the DC and AC are off.
	Blinking red fast (on for 0.2s and off for 0.2s)	–	There is a DC environmental alarm.
	–	Blinking red fast (on for 0.2s and off for 0.2s)	There is an AC environmental alarm.
	Steady red	Steady red	A fault exists.
Communication indicator 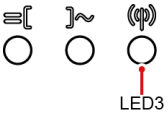	**LED3**		–
	Blinking green fast (on for 0.2s and off for 0.2s)		Communication is in progress.
	Blinking green slowly (on for 1s and off for 1s)		A mobile phone is connected to the inverter.
	Off		There is no communication.
Note: If LED1, LED2, and LED3 are steady red, the inverter is faulty and needs to be replaced.			

----End

6.3 Creating a Plant

6.3.1 Downloading and Installing the App

- You are advised to use an app to access the management system. You can scan the QR code below to download the app. You are advised to use a browser to scan the QR code.
- If the preceding app cannot be used, use the SUN2000 app for commissioning. You can scan the QR code below to download the app. You are advised to use a browser to scan the QR code.

SUN2000 (Android) SUN2000 (iOS)

6.3.2 Registering an Installer Account

For details about how to create the first **Installer** account, see section "Registering the Company's First Installer Account" in the app user manual.

For details about how to create multiple **Installer** accounts for the same company, see section "Registering an Owner Account or Another Installer Account" in the app user manual.

6.3.3 Quick Settings

Step 1 Log in to the app as **Installer**, tap **Setup wizard** on the **Home** screen, scan the QR code on the device, and follow the instructions to connect to the device WLAN.

 Copyright © Huawei Technologies Co., Ltd.

Figure 6-2 Logging in to the app

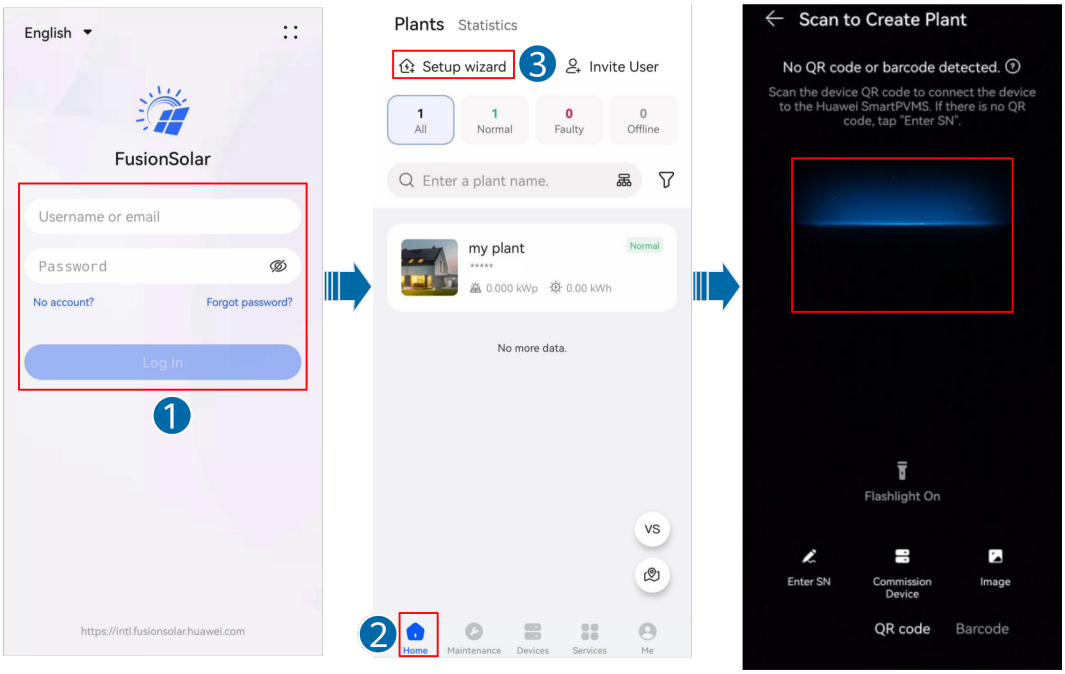

NOTE

- Before tapping **Setup wizard**, ensure that the app is connected to the Internet. If the network connection is abnormal, QR code scanning may fail. In this case, perform operations as prompted on the app.
- If SmartLogger networking is adopted, scan the QR code on the SmartLogger to connect to the device WLAN as prompted.
- If Smart Dongle networking is adopted, scan the QR code on the master inverter to connect to the device WLAN as prompted.
- If the inverter has a built-in WLAN, the WLAN of the Smart Dongle is disabled by default. If the inverter does not have a WLAN, the WLAN of the Smart Dongle is enabled by default.
- If the WLAN of the Smart Dongle is disabled, log in to the app and tap the plant name on the **Home** screen to access the plant screen. Choose **Devices**, tap the Smart Dongle name, choose **O&M Authorization** > **WLAN wakeup**, and tap **OK** to enable the WLAN of the Smart Dongle.

NOTE

- The WLAN name of a device consists of "Device name-Device SN." (The last six digits of the WLAN names of some devices are the same as the last six digits of the device SNs.)
- For the first-time connection, log in with the initial password. You can obtain the initial WLAN password from the device label, that is, the characters following "Password (or PSW)". If the device label does not contain the "Password (or PSW)" field, the initial password is **Changeme**.
- Ensure account security by changing the password periodically. Your password might be stolen or cracked if it is left unchanged for extended periods. If a password is lost, the device cannot be accessed. In these cases, the Company shall not be liable for any loss.
- If the login screen is not displayed after you scan the QR code, check whether your phone is correctly connected to the device WLAN. If not, manually select and connect to the WLAN.
- If **This WLAN network has no Internet access. Connect anyway?** message is displayed when you connect to the built-in WLAN, tap **CONNECT**. Otherwise, you cannot log in to the system. The actual UI and messages may vary with mobile phones.

Step 2 Log in to the local commissioning screen as **Installer** and access **Quick Settings**.

NOTE

- Set the login password as prompted at the first login.
- To ensure account security, protect the login password by changing it periodically, and keep it secure.

Figure 6-3 Home screen for local commissioning

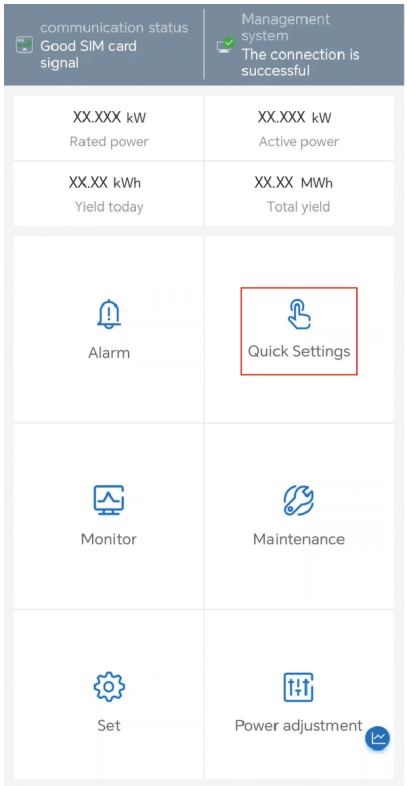

Step 3 Perform deployment and commissioning according to the **Quick Settings** process.

Figure 6-4 Basic parameters (using SmartLogger5000B networking as an example)

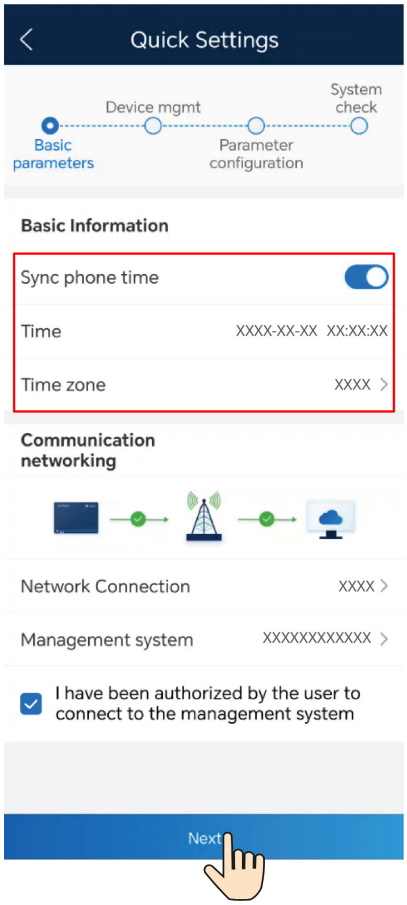

Table 6-3 Quick settings

Parameter	Description
Basic parameters	Set **Basic Information** based on the region.
Device mgmt	• Huawei-developed devices, such as the inverter, can be automatically detected and do not need to be configured. Check whether the number and model of devices are consistent with the actual situation. • Auto discovery does not apply to third-party devices. You need to tap **+** to add them manually. • In the SmartLogger3000A, SmartLogger3000B, SmartLogger5000B, or SmartMGC5000B networking scenario, if the inverter is networked through MBUS, tap **MBUS whitelist** to set the inverter SN list.
Parameter configuration	Set **Grid code** based on the region. For details about **Grid code**, see **A Grid Codes**.

Parameter	Description
System check	After the current screen is displayed, the system automatically checks **Networking state**, **Alarm status**, and **Device status**. After the check is complete, you can tap **Check Again** to perform the check again.

NOTE

- In **Quick Settings**, **Grid code** is **N/A** by default (automatic startup is not supported). Set **Grid code** based on the region where the plant is located.
- Before the equipment is put into operation for the first time, ensure that the parameters are set correctly by professional personnel. Incorrect parameter settings may result in noncompliance with local grid connection requirements and affect the normal operations of the device.

Step 4 Tap **Next** and connect devices to a plant as prompted.

----End

6.3.4 Creating a Plant

For details, see the section about connecting to a plant in the app user manual.

6.3.5 Registering an Owner Account

For details, see section "Registering an Owner Account or Another Installer Account" in the app user manual.

6.4 Setting Function and Feature Parameters

6.4.1 Grid-tied Point Control

Function

The output power of the PV power system can be limited or reduced to ensure that the output power is within the specified range.

Procedure

Step 1 On the home screen, choose **Power adjustment** > **Grid-tied point control**.

Figure 6-5 Grid-tied point control

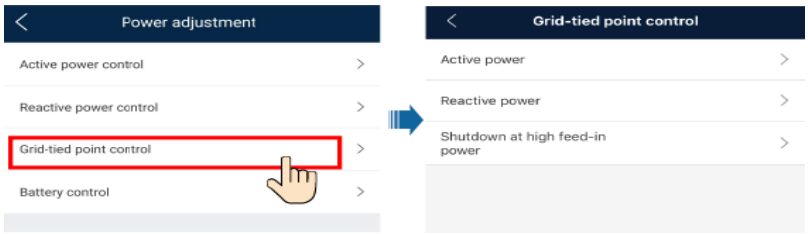

Table 6-4 Grid-tied point control

Parameter Name			Description
Active power	Unlimited	-	If this parameter is set to **Unlimited**, the output power of the inverter is not limited and the inverter can connect to the power grid at the rated power.
	Grid connection with zero power	Closed-loop controller	• If multiple inverters are cascaded, set this parameter to **Controller**. • If there is only one inverter, set this parameter to **Inverter**.
		Limitation mode	• **Total power** indicates export limitation of the total power at the grid-tied point. (When a single-phase power meter is connected, only **Total power** can be selected. When a three-phase meter is connected in three-phase three-wire mode, only **Total power** can be selected.) • **Single-phase power** indicates export limitation of the power in each phase at the grid-tied point. **Single-phase power** can be selected only if a three-phase meter is connected in three-phase four-wire mode.
		Power adjustment period	Specifies the shortest interval for a single export limitation adjustment.
		Maximum protection time	Specifies the time for detecting power meter data. If the Smart Dongle does not detect any power meter data within the preset time, the Smart Dongle delivers the preset value of the **Active power output limit for fail-safe** to the inverter for protection.
		Power raising threshold	Specifies the step for grid-tied power adjustment.
		Active power output limit for fail-safe	Specifies the derating value of the inverter active power by percentage. If the Smart Dongle does not detect any power meter data or the communication between the Smart Dongle and the inverter is disconnected, the Smart Dongle delivers the derating value of the inverter active power by percentage.
		Communication disconnection fail-safe	In the inverter export limitation scenario, if this parameter is set to **Enable**, the inverter will derate according to the active power derating percentage when the communication between the inverter and the Smart Dongle is disconnected for a period longer than **Communication disconnection detection time**.
		Communication disconnection detection time	Specifies the fail-safe detection time in case of disconnection between the inverter and the Smart Dongle. This parameter is displayed when **Communication disconnection fail-safe** is set to **Enable**.

 Copyright © Huawei Technologies Co., Ltd.

Parameter Name			Description
	Grid connection with limited power (kW)	Closed-loop controller	• If multiple inverters are cascaded, set this parameter to **Controller**. • If there is only one inverter, set this parameter to **Inverter**.
		Limitation mode	• **Total power** indicates export limitation of the total power at the grid-tied point. (When a single-phase power meter is connected, only **Total power** can be selected. When a three-phase meter is connected in three-phase three-wire mode, only **Total power** can be selected.) • **Single-phase power** indicates export limitation of the power in each phase at the grid-tied point. **Single-phase power** can be selected only if a three-phase meter is connected in three-phase four-wire mode.
		Maximum grid feed-in power	Specifies the maximum active power transmitted from the grid-tied point to the power grid.
		Power adjustment period	Specifies the shortest interval for a single export limitation adjustment.
		Maximum protection time	Specifies the time for detecting power meter data. If the Smart Dongle does not detect any power meter data within the preset time, the Smart Dongle delivers the preset value of the **Active power output limit for fail-safe** to the inverter for protection.
		Power raising threshold	Specifies the step for grid-tied power adjustment.
		Power adjustment period	Specifies the shortest interval for a single export limitation adjustment.
		Power control hysteresis	Specifies the deadband for adjusting the inverter output power. If the power fluctuates within the power control hysteresis, the power is not adjusted.
		Active power output limit for fail-safe	Specifies the derating value of the inverter active power by percentage. If the Smart Dongle does not detect any power meter data or the communication between the Smart Dongle and the inverter is disconnected, the Smart Dongle delivers the derating value of the inverter active power by percentage.
		Communication disconnection fail-safe	In the inverter export limitation scenario, if this parameter is set to **Enable**, the inverter will derate according to the active power derating percentage when the communication between the inverter and the Smart Dongle is disconnected for a period longer than **Communication disconnection detection time**.

 Copyright © Huawei Technologies Co., Ltd.

Parameter Name			Description
		Communication disconnection detection time	Specifies the fail-safe detection time in case of disconnection between the inverter and the Smart Dongle. This parameter is displayed when **Communication disconnection fail-safe** is set to **Enable**.
	Grid connection with limited power	Closed-loop controller	• For a single inverter, set **Closed-loop controller** to **Inverter**. • For multiple inverters, **Closed-loop controller** can only be set to **Controller**.
		Limitation mode	• **Total power** indicates export limitation of the total power at the grid-tied point. (When a single-phase power meter is connected, only **Total power** can be selected. When a three-phase meter is connected in three-phase three-wire mode, only **Total power** can be selected.) • **Single-phase power** indicates export limitation of the power in each phase at the grid-tied point. **Single-phase power** can be selected only if a three-phase meter is connected in three-phase four-wire mode.
		PV plant capacity	Specifies the total maximum active power in the inverter cascading scenario.
		Maximum grid feed-in power	Specifies the percentage of the maximum active power at the grid-tied point to the PV plant capacity.
		Maximum protection time	Specifies the time for detecting power meter data. If the Smart Dongle does not detect any power meter data within the preset time, the Smart Dongle delivers the preset value of the **Active power output limit for fail-safe** to the inverter for protection.
		Power raising threshold	Specifies the step for grid-tied power adjustment.
		Power adjustment period	Specifies the shortest interval for a single export limitation adjustment.
		Power control hysteresis	Specifies the deadband for adjusting the inverter output power. If the power fluctuates within the power control hysteresis, the power is not adjusted.
		Active power output limit for fail-safe	Specifies the derating value of the inverter active power by percentage. If the Dongle does not detect any power meter data or the communication between the Dongle and the inverter is disconnected, the Dongle delivers the derating value of the inverter active power by percentage.

 Copyright © Huawei Technologies Co., Ltd.

Parameter Name			Description
		Communication disconnection fail-safe	In the inverter export limitation scenario, if this parameter is set to **Enable**, the inverter will derate the active power when the communication between the inverter and the Smart Dongle is disconnected for a period longer than **Communication disconnection detection time**.
		Communication disconnection detection time	Specifies the time for determining the communication disconnection between the inverter and the Dongle. This parameter is displayed when **Communication disconnection fail-safe** is set to **Enable**.
Shutdown at high feed-in power[1]	Shutdown at high feed-in power		● The default value is **Disable**. ● If this parameter is set to **Enable**, the inverter shuts down for protection when the power at the grid-tied point exceeds the threshold and remains in this condition for the specified time threshold.
	Upper feed-in power threshold for inverter shutdown (kW)		The default value is **0**. This parameter specifies the power threshold of the grid-tied point for triggering inverter shutdown.
	High feed-in power duration threshold for triggering inverter shutdown (s)		The default value is **20**. This parameter specifies the duration threshold of high feed-in power for triggering inverter shutdown. ● When **High feed-in power duration threshold for triggering inverter shutdown** is set to **5**, **Shutdown at high feed-in power** takes precedence. ● When **High feed-in power duration threshold for triggering inverter shutdown** is set to **20**, **Grid connection with limited power** takes precedence (when **Active power control** is set to **Grid connection with limited power**).
Note 1: This parameter is supported only for the AS4777 grid code.			

----End

6.4.2 Apparent Power Control on the Inverter Output Side

On the home screen, tap **Settings > Power adjustment** and set inverter parameters.

Figure 6-6 Apparent power control

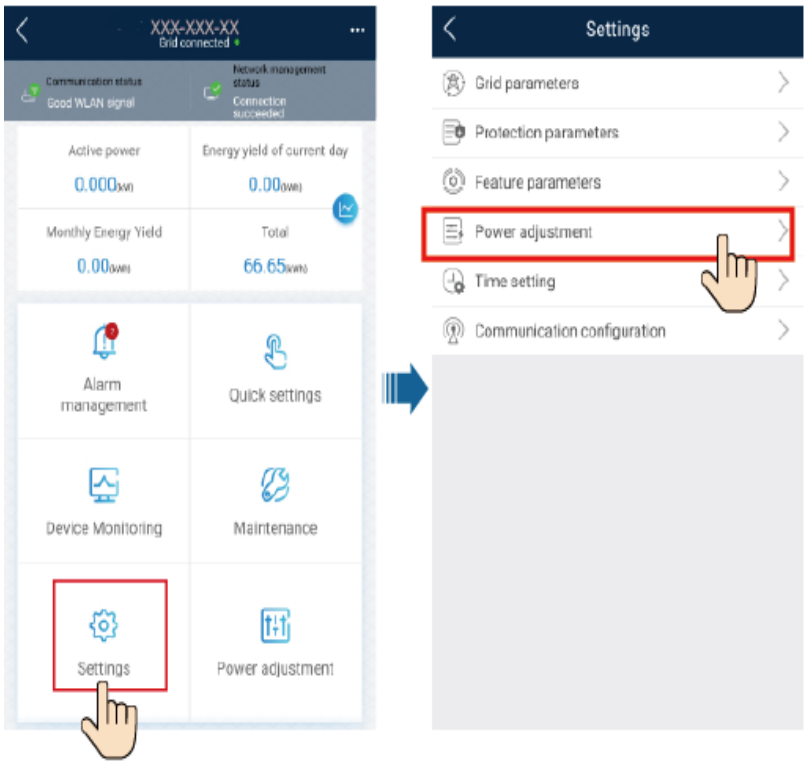

Table 6-5 Apparent power control

Parameter	Description	Value Range
Maximum apparent power (kVA)	Specifies the output upper threshold for the maximum apparent power to adapt to the capacity requirements of standard and customized solar inverters.	[Maximum active power, S_{max}]
Maximum active power (kW)	Specifies the output upper threshold for the maximum active power to adapt to different market requirements.	[0.1, P_{max}]

NOTE

The lower threshold for the maximum apparent power is the maximum active power. To lower the maximum apparent power, lower the maximum active power first.

 Copyright © Huawei Technologies Co., Ltd.

7 Maintenance

DANGER

- Wear personal protective equipment and use dedicated insulated tools to avoid electric shocks or short circuits.

WARNING

- Before performing maintenance, power off the equipment, follow the instructions on the delayed discharge label, and wait for a period of time as specified to ensure that the equipment is not energized.

7.1 System Power-Off

Precautions

WARNING

After the inverter system is powered off, the residual electricity and heat on the enclosure may still cause electric shocks and body burns. Therefore, wait for at least 5 minutes after system power-off and put on protective gloves before working on the inverter.

Procedure

Step 1 Send a shutdown command on the app.

Step 2 Turn off the AC switch between the inverter and the power grid.

Step 3 Set the **DC SWITCH** at the bottom of the inverter to **OFF**.

Step 4 (Optional) Install the DC switch locking screw.

 Copyright © Huawei Technologies Co., Ltd.

Figure 7-1 Installing the DC switch locking screw

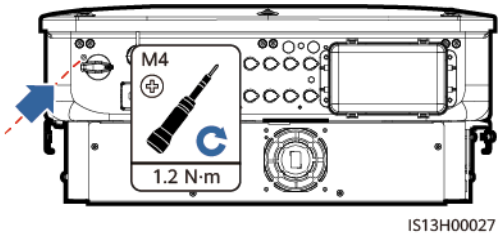

Step 5 Turn off the DC switch (if any) between the inverter and PV strings.

----End

7.2 Routine Maintenance

To ensure that the inverter can operate properly for a long term, you are advised to perform routine maintenance on it as described in this section.

CAUTION

Power off the system before cleaning the system, connecting cables, and checking grounding reliability.

Table 7-1 Maintenance checklist

Check Item	Check Method	Maintenance Method	Maintenance Interval
Alarm	Check alarms on the app, SmartLogger, or management system.	For details, see **7.3 Alarm Reference**. For details about alarm 2062, see **K Locating Insulation Resistance Faults**.	Routine maintenance
Cleanness of air intake and exhaust vents	Periodically check whether there is dust or foreign objects at the air intake and exhaust vents.	Power off the inverter and remove dust and foreign objects. If necessary, remove the baffle plate from the air intake vent for cleaning.	Once every 6 to 12 months (or once every 3 to 6 months based on the actual dust conditions in the environment)
Fan	Check whether the fan generates abnormal noise during operation.	Remove foreign objects from the fan. If the abnormal noise persists, replace the fan. For details, see **7.4 Replacing a Fan**.	Once every 6 to 12 months

 Copyright © Huawei Technologies Co., Ltd.

Check Item	Check Method	Maintenance Method	Maintenance Interval
System running status	• Check whether the inverter is damaged or deformed. • Check whether the inverter generates abnormal sound during operation. • Check whether all inverter parameters are correctly set during operation.	Contact the Company's service engineers.	Once every 6 months
Electrical connections	• Check whether cables are disconnected or loose. • Check whether cables are damaged, especially whether the cable sheath that contacts a metal surface is damaged. • Check whether the sealing plugs of unused DC input terminals fall off. • Check whether the unused COM and USB ports are locked by waterproof caps.	• Power off the inverter and secure loose or disconnected cables. • Power off the inverter and replace the damaged cables. • Install sealing plugs on unused DC input terminals. • Tighten the waterproof caps on the unused COM and USB ports.	6 months after the first commissioning and once every 6 to 12 months after that
Grounding reliability	Check whether ground cables are securely connected.	Tighten the screws on both sides of the ground cable and ensure that the resistance meets the requirements.	6 months after the first commissioning and once every 6 to 12 months after that
Vegetation around the inverter	Check whether there are weeds around the inverter.	• Perform inspection and weeding as required. • Clean the site promptly after weeding.	Based on the local wilting season

 Copyright © Huawei Technologies Co., Ltd.

Figure 7-2 Removing the baffle plate of the air intake vent

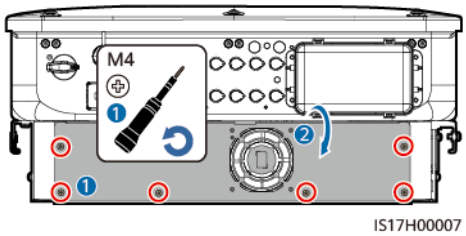

NOTICE

After the cleaning is complete, reinstall the baffle plate. Tighten the M4 screws with a torque of 1.2 N·m.

7.3 Alarm Reference

For details about alarms, see **Inverter Alarm Reference**.

7.4 Replacing a Fan

CAUTION

- Before replacing a fan, power off the inverter.
- When replacing a fan, use insulated tools and wear PPE.

Step 1 Remove the screws from the fan mounting plate and store them properly. Turn the fan mounting plate until the fan surface is horizontal with the inverter.

Figure 7-3 Removing screws from the fan mounting plate

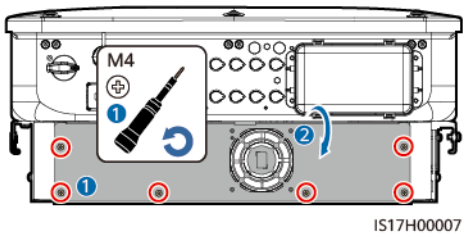

Step 2 Remove the cable tie, loosen the connector, disconnect the cable, and remove the faulty fan.

 Copyright © Huawei Technologies Co., Ltd.

Figure 7-4 Removing the faulty fan

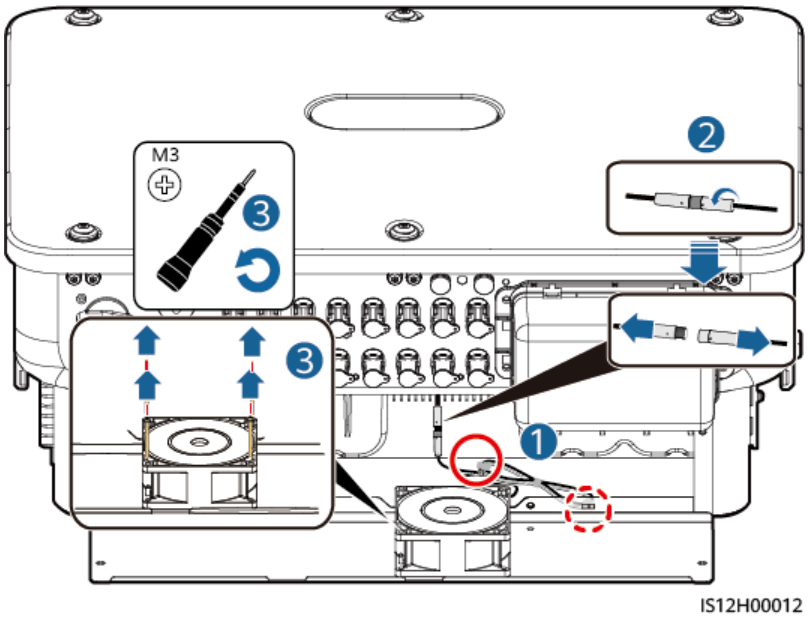

Step 3 Install the new fan correctly, bind the fan cable, and reconnect the cable.

NOTICE

When binding the cable, you are advised to reserve 80 mm at one end of the terminal, fold the rest of the cable, bind it in the middle using a cable tie, and then bind the cable to the cable manager.

Figure 7-5 Binding a cable

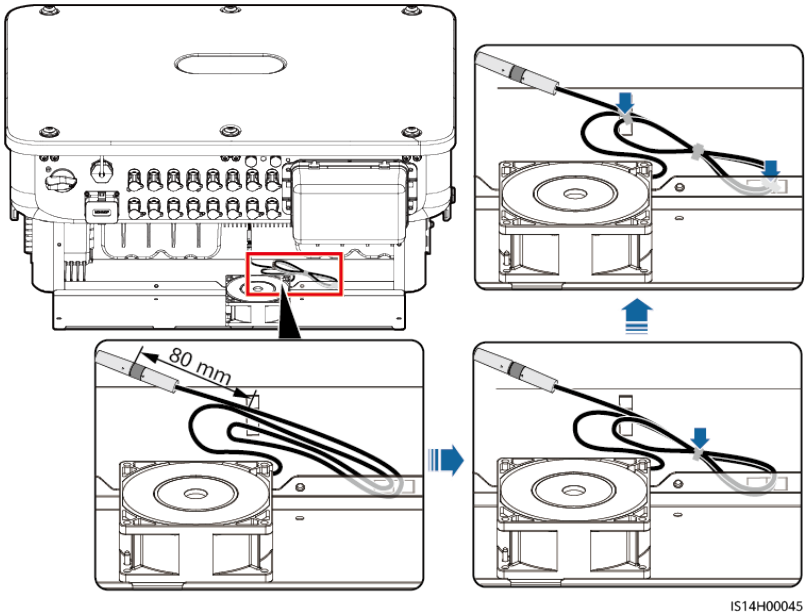

----End

8 Handling the Inverter

8.1 Removing the SUN2000

NOTICE

Before removing the SUN2000, disconnect both AC and DC connections.

Perform the following operations to remove the SUN2000:

1. Disconnect all cables from the SUN2000, including RS485 communications cables, DC input power cables, AC output power cables, and PGND cables.
2. Remove the SUN2000 from the mounting bracket.
3. Remove the mounting bracket.

8.2 Packing the SUN2000

- If the original packing materials are available, put the SUN2000 inside them and then seal them by using adhesive tape.
- If the original packing materials are not available, put the SUN2000 inside a suitable cardboard box and seal it properly.

8.3 Disposing of the SUN2000

If the SUN2000 service life expires, dispose of it according to the local disposal rules for electrical equipment waste.

 Copyright © Huawei Technologies Co., Ltd.

9 Technical Specifications

Efficiency

Item	SUN2000-50KTL-ZHM3	SUN2000-50KTL-M3	SUN2000-50KTL-BRM3
Maximum efficiency	98.50%	98.50%/400 V 98.71%/480 V	98.50%/380 V
Efficiency in China	98.00%	-	
European efficiency	-	98.24%/400 V 98.40%/480 V	98.24%/380 V

Input

Item	SUN2000-50KTL-ZHM3	SUN2000-50KTL-M3	SUN2000-50KTL-BRM3
Recommended maximum input DC power	75 kW		
Maximum input voltage[a]	1100 V		
Maximum input current per MPPT	20 A (one PV string)/30 A (one MPPT circuit)		
Maximum short-circuit current per MPPT	40 A		
Minimum startup voltage	200 V		
Operating voltage range[b]	200–1000 V		

 Copyright © Huawei Technologies Co., Ltd.

Item	SUN2000-50KTL-ZHM3	SUN2000-50KTL-M3	SUN2000-50KTL-BRM3
Full-load MPPT voltage range[c]	530–800 V (380 V AC/400 V AC) 625–850 V (480 V AC)	530–800 V (380 V AC/400 V AC) 625–850 V (480 V AC)	530–800 V (380 V AC)
Rated input voltage	600 V (380 V AC/400 V AC) 720 V (480 V AC)	600 V (380 V AC/400 V AC) 720 V (480 V AC)	600 V (380 V AC)
Maximum number of inputs	8		
Number of MPPTs	4		
Note a: The maximum input voltage is the maximum DC input voltage that the inverter can withstand. If the input voltage exceeds this value, the inverter may be damaged. Note b: If the input voltage is beyond the operating voltage range, the inverter cannot work properly. Note c: The PV strings connecting to the same MPPT circuit shall use the same model and quantity of PV modules. It is recommended that the PV string voltage be higher than the lower threshold of the full-load MPPT voltage.			

Output

Item	SUN2000-50KTL-ZHM3	SUN2000-50KTL-M3	SUN2000-50KTL-BRM3
Rated output power	50 kW	50 kW	50 kW
Maximum apparent power	55 kVA	55 kVA	55 kVA
Maximum active power (cosϕ = 1)	55 kW	55 kW	
Rated output voltage[a]	220 V AC/380 V AC, 230 V AC/400 V AC, 277 V AC/480 V AC, 3W+(N)[b]+PE	220 V AC/380 V AC, 230 V AC/400 V AC, 277 V AC/480 V AC, 3W+(N)[b]+PE	220 V AC/380 V AC, 3W+(N)[b]+PE
Maximum output voltage at long-term operation	Refer to the local power grid standards.		
Rated output current	76.0 A/380 V 72.2 A/400 V 60.1 A/480 V	76.0 A/380 V 72.2 A/400 V 60.1 A/480 V	76.0 A/380 V

 Copyright © Huawei Technologies Co., Ltd.

Item	SUN2000-50KTL-ZHM3	SUN2000-50KTL-M3	SUN2000-50KTL-BRM3
Maximum output current	84.0 A/380 V 79.8 A/400 V 66.5 A/480 V	84.0 A/380 V 79.8 A/400 V 66.5 A/480 V	84.0 A/380 V
Supported power grid frequency	50 Hz/60 Hz	50 Hz/60 Hz	60 Hz
Power factor	0.8 leading to 0.8 lagging		
Maximum total harmonic distortion (rated power)	< 3% (rated conditions)		
Note a: The rated output voltage is determined by **Grid code**, which can be set on the app, SmartLogger, or management system. Note b: You can determine whether to connect the N wire based on the application scenario. In scenarios without N wires, set **Output mode** to **Three-phase three-wire**. In scenarios with N wires, set **Output Mode** to **Three-phase four-wire**.			

Protection

Item	SUN2000-50KTL-ZHM3	SUN2000-50KTL-M3	SUN2000-50KTL-BRM3
Overvoltage category	PV II/AC III		
Input DC switch	Supported		
Anti-islanding protection	Supported		
Output overcurrent protection	Supported		
Input reverse connection protection	Supported		
PV string fault detection	Supported		
DC surge protection	Type II	Type II/Type I[a] (optional)	Type II
AC surge protection	Type II		

 Copyright © Huawei Technologies Co., Ltd.

Item	SUN2000-50KTL-ZHM3	SUN2000-50KTL-M3	SUN2000-50KTL-BRM3
Insulation resistance detection	Supported		
Residual current monitoring unit (RCMU)	Supported		
Note a: The DC SPD complies with IEC/EN 61643-11 and IEC/EN 61643-31.			

Display and Communication

Item	SUN2000-50KTL-ZHM3	SUN2000-50KTL-M3	SUN2000-50KTL-BRM3
Display	LED indicators; WLAN+App		
RS485	Supported		
Built-in WLAN	Supported		
AC MBUS	Supported		
DC MBUS	Supported		
Arc-fault circuit interrupter (AFCI)	Supported		
Built-in PID recovery	Supported		

General Specifications

Item	SUN2000-50KTL-ZHM3	SUN2000-50KTL-M3	SUN2000-50KTL-BRM3
Dimensions (W x H x D)	640 mm x 530 mm x 270 mm		
Net weight	49 kg		
Operating ambient temperature	–25°C to +60°C		
Relative humidity	0%–100% RH (non-condensing)		
Cooling mode	Air cooling		

 Copyright © Huawei Technologies Co., Ltd.

Item	SUN2000-50KTL-ZHM3	SUN2000-50KTL-M3	SUN2000-50KTL-BRM3
Maximum operating altitude	4000 m		
Storage temperature	–40°C to +70°C		
IP rating	IP66		
Topology	Transformerless		

Wireless Communication Specifications

Item	Inverter Built-in WiFi	WLAN-FE Smart Dongle	4G Smart Dongle
Frequency	2400–2483.5 MHz	SDongleA-05: 2400–2483.5 MHz	SDongleB-06-EU (WiFi): 2400–2483.5 MHz SDongleB-06-EU (4G): ● Supports LTE FDD: B1/B3/B5/B8. ● Supports LTE TDD: B7/B20/B28/B38/B40/B41. ● Supports GSM/GPRS/EDGE: 900 MHz/1800 MHz. SDongleB-06-AU (WiFi): 2400–2483.5 MHz SDongleB-06-AU (4G): ● LTE-FDD: B1/B2/B3/B4/B5/B7/B8/B28 ● LTE-TDD: B40 ● WCDMA: B1/B2/B5/B8 ● GSM: 850 MHz/900 MHz/1800 MHz/1900 MHz Note: The SDongleB-06-EU applies only to Europe. The SDongleB-06-AU applies only to Australia.

 Copyright © Huawei Technologies Co., Ltd.

Item	Inverter Built-in WiFi	WLAN-FE Smart Dongle	4G Smart Dongle
Protocol standard	WLAN 802.11b/g/n	SDongleA-05: WLAN 802.11b/g/n	SDongleB-06-EU (WiFi): WLAN 802.11b/g/n SDongleB-06-EU (4G): ● Supports LTE FDD (with receive diversity): B1/B3/B5/B8. ● Supports LTE TDD (with receive diversity): B7/B20/B28/B38/B40/B41. ● Supports GSM: 900 MHz/1800 MHz. ● Supports digital audio. SDongleB-06-AU (WiFi): WLAN 802.11b/g/n SDongleB-06-AU (4G): ● Supports LTE FDD (with receive diversity): B1/B2/B3/B4/B5/B7/B8/B28/B66. ● Supports LTE-TDD (with receive diversity): B40. ● Supports WCDMA: B1/B2/B4/B5/B8. ● Supports GSM: 850/900/1800/1900 MHz. ● Supports digital audio. Note: The SDongleB-06-EU applies only to Europe. The SDongleB-06-AU applies only to Australia.

 Copyright © Huawei Technologies Co., Ltd.

Item	Inverter Built-in WiFi	WLAN-FE Smart Dongle	4G Smart Dongle
Bandwidth	20 MHz/40 MHz (optional)	20 MHz/40 MHz (optional)	LTE features: ● Supports a maximum of 3GPP R8 non-CA Cat 4 FDD and TDD. ● Supports 1.4 MHz/3 MHz/5 MHz/10 MHz/15 MHz/20 MHz RF bandwidth. ● Supports MIMO in the downlink. ● LTE FDD: maximum downlink rate of 150 Mbit/s and maximum uplink rate of 50 Mbit/s ● LTE TDD: maximum downlink rate of 130 Mbit/s and maximum uplink rate of 30 Mbit/s UMTS features: ● Supports 3GPP R7 HSDPA+, HSDPA, HSUPA, and WCDMA. ● Supports QPSK and 16QAM modulation. ● HSDPA+: maximum downlink rate of 21 Mbit/s ● HSUPA: maximum uplink rate of 5.76 Mbit/s ● WCDMA: maximum downlink rate of 384 kbit/s and maximum uplink rate of 384 kbit/s GSM features: GPRS: ● Supports GPRS multislot class 12. ● Coding schemes: CS-1, CS-2, CS-3, and CS-4 ● Maximum downlink rate: 85.6 kbit/s; maximum uplink rate: 85.6 kbit/s EDGE: ● Supports EDGE multislot class 12. ● Supports GMSK and 8-PSK modulation and coding schemes. ● Downlink coding format: MCS 1–9 ● Uplink coding format: MCS 1–9

 Copyright © Huawei Technologies Co., Ltd.

Item	Inverter Built-in WiFi	WLAN-FE Smart Dongle	4G Smart Dongle
			• Maximum downlink rate: 236.8 kbit/s; maximum uplink rate: 236.8 kbit/s
Maximum transmit power	≤ 20 dBm EIRP	≤ 20 dBm EIRP	• Class 4 (33 dBm±2 dB), EGSM900 frequency band • Class 1 (30 dBm±2 dB), DCS1800 frequency band • Class E2 (27 dBm±3 dB), EGSM900 8-PSK • Class E2 (26 dBm±3 dB), DCS1800 8-PSK • Class 3 (24 dBm+1/–3 dB), WCDMA frequency band • Class 3 (23 dBm±2 dB), LTE FDD frequency band • Class 3 (23 dBm±2 dB), LTE TDD frequency band

 Copyright © Huawei Technologies Co., Ltd.

A Grid Codes

NOTE

The grid codes are subject to change. The listed codes are for reference only.

No.	Grid Code	Description	SUN2000-50KTL-ZHM3	SUN2000-50KTL-M3	SUN2000-50KTL-BRM3
1	NB/T 32004	China low-voltage power grid	Supported	-	-
2	CHINA-MV480	China medium-voltage standard power grid	Supported	-	-
3	CHINA-MV	China medium-voltage standard power grid	Supported	-	-
4	VDE-AR-N-4105	Germany low-voltage power grid	-	Supported	Supported
5	UTE C 15-712-1(A)	France mainland power grid	-	Supported	Supported
6	UTE C 15-712-1(B)	France island power grid	-	Supported	Supported
7	UTE C 15-712-1(C)	France island power grid	-	Supported	Supported
8	VDE 0126-1-1-GR(A)	Greece mainland power grid	-	Supported	Supported

 Copyright © Huawei Technologies Co., Ltd.

No.	Grid Code	Description	SUN2000-50KTL-ZHM3	SUN2000-50KTL-M3	SUN2000-50KTL-BRM3
9	VDE 0126-1-1-GR(B)	Greece island power grid	-	Supported	Supported
10	VDE-AR-N4110	Germany medium-voltage power grid (230 V)	-	Supported	Supported
11	BDEW-MV	Germany medium-voltage power grid	-	Supported	Supported
12	CEI0-21	Italy power grid	-	Supported	Supported
13	RD1699/661	Spain low-voltage power grid	-	Supported	Supported
14	RD1699/661-MV480	Spain medium-voltage power grid	-	Supported	Supported
15	EN50438-NL	Netherlands power grid	-	Supported	Supported
16	C10/11	Belgium power grid	-	Supported	Supported
17	IEC61727	IEC 61727 low-voltage grid-connection (50 Hz)	-	Supported	Supported
18	CEI0-16	Italy power grid	-	Supported	Supported
19	TAI-PEA	Thailand grid-connection standard	-	Supported	Supported
20	TAI-MEA	Thailand grid-connection standard	-	Supported	Supported
21	VDE-AR-N4110-MV480	Germany medium-voltage standard power grid	-	Supported	Supported

 Copyright © Huawei Technologies Co., Ltd.

No.	Grid Code	Description	SUN2000-50KTL-ZHM3	SUN2000-50KTL-M3	SUN2000-50KTL-BRM3
22	BDEW-MV480	Germany medium-voltage standard power grid	-	Supported	Supported
23	IEC61727-MV480	IEC 61727 medium-voltage grid-connection (50 Hz)	-	Supported	Supported
24	UTE C 15-712-1-MV480	France island power grid	-	Supported	Supported
25	TAI-PEA-MV480	Thailand medium-voltage grid-connection (PEA)	-	Supported	Supported
26	TAI-MEA-MV480	Thailand medium-voltage grid-connection (MEA)	-	Supported	Supported
27	EN50438-DK-MV480	Denmark medium-voltage grid-connection	-	Supported	Supported
28	EN50438-TR-MV480	Türkiye medium-voltage power grid	-	Supported	Supported
29	EN50438-TR	Türkiye low-voltage power grid	-	Supported	Supported
30	C11/C10-MV480	Belgium medium-voltage power grid	-	Supported	Supported
31	Philippines	Philippines low-voltage power grid	-	Supported	Supported

 Copyright © Huawei Technologies Co., Ltd.

No.	Grid Code	Description	SUN2000-50KTL-ZHM3	SUN2000-50KTL-M3	SUN2000-50KTL-BRM3
32	Philippines-MV480	Philippines medium-voltage power grid	-	Supported	Supported
33	NRS-097-2-1	South Africa standard power grid	-	Supported	Supported
34	NRS-097-2-1-MV480	South Africa medium-voltage standard power grid	-	Supported	Supported
35	IEC61727-60Hz	IEC 61727 low-voltage grid-connection (60 Hz)	-	Supported	Supported
36	IEC61727-60Hz-MV480	IEC 61727 medium-voltage grid-connection (60 Hz)	-	Supported	Supported
37	ANRE	Romania low-voltage power grid	-	Supported	Supported
38	PO12.3-MV480	Spain medium-voltage power grid	-	Supported	Supported
39	EN50438_IE-MV480	Ireland medium-voltage power grid	-	Supported	Supported
40	EN50438_IE	Ireland low-voltage power grid	-	Supported	Supported
41	CEI0-16-MV480	Italy medium-voltage power grid	-	Supported	Supported
42	PO12.3	Spain low-voltage power grid	-	Supported	Supported

 Copyright © Huawei Technologies Co., Ltd.

No.	Grid Code	Description	SUN2000-50KTL-ZHM3	SUN2000-50KTL-M3	SUN2000-50KTL-BRM3
43	CEI0-21-MV480	Italy medium-voltage power grid	-	Supported	Supported
44	EN50549-LV	Ireland power grid	-	Supported	Supported
45	EN50549-MV480	Ireland medium-voltage power grid	-	Supported	Supported
46	Jordan-Transmission	Jordan low-voltage power grid	-	Supported	Supported
47	Jordan-Transmission-MV480	Jordan medium-voltage power grid	-	Supported	Supported
48	ABNT NBR 16149	Brazil power grid	-	Supported	Supported
49	ABNT NBR 16149-MV480	Brazil medium-voltage power grid	-	Supported	Supported
50	SA_RPPs	South Africa low-voltage power grid	-	Supported	Supported
51	SA_RPPs-MV480	South Africa medium-voltage power grid	-	Supported	Supported
52	SAUDI	Saudi Arabia power grid	-	Supported	Supported
53	SAUDI-MV480	Saudi Arabia power grid	-	Supported	Supported
54	VDE-AR-N4120-HV	VDE 4120 standard power grid	-	Supported	Supported
55	VDE-AR-N4120-HV480	VDE 4120 standard power grid	-	Supported	Supported

 Copyright © Huawei Technologies Co., Ltd.

No.	Grid Code	Description	SUN2000-50KTL-ZHM3	SUN2000-50KTL-M3	SUN2000-50KTL-BRM3
56	Vietnam	Vietnam power grid	-	Supported	Supported
57	Vietnam-MV480	Vietnam power grid	-	Supported	Supported
58	ARGENTINA-MV480	Argentina medium-voltage power grid	-	Supported	Supported
59	EN50438-NL-MV480	Netherlands medium-voltage power grid	-	Supported	Supported
60	NTS	Spain power grid	-	Supported	Supported
61	NTS-MV480	Spain medium-voltage power grid	-	Supported	Supported
62	SINGAPORE	Singapore low-voltage power grid	-	Supported	Supported
63	SINGAPORE-MV480	Singapore medium-voltage power grid	-	Supported	Supported
64	C10/11-MV400	Belgium medium-voltage power grid	-	Supported	Supported
65	EN50549-PL	Poland power grid	-	Supported	Supported
66	EN50549-MV400	Ireland new standard power grid	-	Supported	Supported
67	VDE 0126-1-1-BU	Bulgaria power grid	-	Supported	Supported
68	AS4777	Australia power grid	-	Supported	Supported
69	Custom (50 Hz)	Reserved	-	Supported	Supported
70	Custom (60 Hz)	Reserved	-	Supported	Supported

 Copyright © Huawei Technologies Co., Ltd.

No.	Grid Code	Description	SUN2000-50KTL-ZHM3	SUN2000-50KTL-M3	SUN2000-50KTL-BRM3
71	AS4777-MV480	Australia medium-voltage power grid	-	Supported	Supported
72	Israel	Israel power grid	-	Supported	Supported
73	Israel-MV400	Israel power grid	-	Supported	Supported
74	Israel-MV480	Israel power grid	-	Supported	Supported
75	NC2022	New Caledonia power grid	-	Supported	Supported
76	AUSTRIA-TYPEB-LV400	Austria power grid	-	Supported	Supported
77	AUSTRIA-TYPEB-LV480	Austria power grid	-	Supported	Supported
78	AUSTRIA-TYPEB-MV400	Austria power grid	-	Supported	Supported
79	AUSTRIA-TYPEB-MV480	Austria power grid	-	Supported	Supported
80	EN50438-CZ	Czech Republic power grid	-	Supported	Supported
81	CZECH-EN50549-LV230	Czech Republic power grid	-	Supported	Supported
82	BRAZIL-P140-LV220	Brazil P140 power grid	-	Supported	Supported
83	BRAZIL-P140-480	Brazil P140 power grid	-	Supported	Supported
84	CHINA-LV220/380	China low-voltage power grid	Supported	-	-
85	G59-England	England 230 V power grid (I > 16 A)	-	Supported	Supported

 Copyright © Huawei Technologies Co., Ltd.

No.	Grid Code	Description	SUN2000-50KTL-ZHM3	SUN2000-50KTL-M3	SUN2000-50KTL-BRM3
86	G59-Scotland	Scotland 240 V power grid (I > 16 A)	-	Supported	Supported
87	G83-England	England 230 V power grid (I < 16 A)	-	Supported	Supported
88	G83-Scotland	Scotland 240 V power grid (I < 16 A)	-	Supported	Supported
89	Custom MV480 (50 Hz)	Reserved	-	Supported	Supported
90	Custom MV480 (60 Hz)	Reserved	-	Supported	Supported
91	G59-England-MV480	UK 480 V medium-voltage grid connection (I > 16 A)	-	Supported	Supported
92	KOREA	South Korea power grid	-	Supported	Supported
93	IEEE 1547-MV480	IEEE 1547-MV480	-	Supported	Supported
94	ANRE-MV480	Romania medium-voltage power grid	-	Supported	Supported
95	KOREA-MV480	South Korea medium-voltage power grid	-	Supported	Supported
96	Egypt ETEC	Egypt low-voltage power grid	-	Supported	Supported
97	Egypt ETEC-MV480	Egypt medium-voltage power grid	-	Supported	Supported
98	NAMIBIA	Namibia power grid	-	Supported	Supported

 Copyright © Huawei Technologies Co., Ltd.

No.	Grid Code	Description	SUN2000-50KTL-ZHM3	SUN2000-50KTL-M3	SUN2000-50KTL-BRM3
99	INDIA	India low-voltage power grid	-	Supported	Supported
100	ZAMBIA	Zambia low-voltage power grid	-	Supported	Supported
101	ZAMBIA-MV480	Zambia medium-voltage power grid	-	Supported	Supported
102	Chile	Chile low-voltage power grid	-	Supported	Supported
103	Chile-MV480	Chile medium-voltage power grid	-	Supported	Supported
104	Mexico-MV480	Mexico medium-voltage power grid	-	Supported	Supported
105	Malaysian	Malaysia low-voltage power grid	-	Supported	Supported
106	Malaysian-MV480	Malaysia medium-voltage power grid	-	Supported	Supported
107	KENYA_ETHIOPIA	Kenya low-voltage power grid and Ethiopia power grid	-	Supported	Supported
108	KENYA_ETHIOPIA-MV480	Kenya low-voltage power grid and Ethiopia medium-voltage power grid	-	Supported	Supported

 Copyright © Huawei Technologies Co., Ltd.

No.	Grid Code	Description	SUN2000-50KTL-ZHM3	SUN2000-50KTL-M3	SUN2000-50KTL-BRM3
109	NIGERIA	Nigeria low-voltage power grid	-	Supported	Supported
110	NIGERIA-MV480	Nigeria medium-voltage power grid	-	Supported	Supported
111	DUBAI	Dubai low-voltage power grid	-	Supported	Supported
112	DUBAI-MV480	Dubai medium-voltage power grid	-	Supported	Supported
113	Northern Ireland	Northern Ireland low-voltage power grid	-	Supported	Supported
114	Northern Ireland-MV480	Northern Ireland medium-voltage power grid	-	Supported	Supported
115	Cameroon	Cameroon low-voltage power grid	-	Supported	Supported
116	Cameroon-MV480	Cameroon medium-voltage power grid	-	Supported	Supported
117	Jordan-Distribution	Jordan power distribution network low-voltage power grid	-	Supported	Supported
118	Jordan-Distribution-MV480	Jordan power distribution network medium-voltage power grid	-	Supported	Supported

 Copyright © Huawei Technologies Co., Ltd.

No.	Grid Code	Description	SUN2000-50KTL-ZHM3	SUN2000-50KTL-M3	SUN2000-50KTL-BRM3
119	NAMIBIA_MV480	Namibia power grid	-	Supported	Supported
120	LEBANON	Lebanon low-voltage power grid	-	Supported	Supported
121	LEBANON-MV480	Lebanon medium-voltage power grid	-	Supported	Supported
122	Jordan-Transmission-HV	Jordan high-voltage power grid	-	Supported	Supported
123	Jordan-Transmission-HV480	Jordan high-voltage power grid	-	Supported	Supported
124	TUNISIA	Tunisia power grid	-	Supported	Supported
125	TUNISIA-MV480	Tunisia medium-voltage power grid	-	Supported	Supported
126	AUSTRALIA-NER	Australia NER standard power grid	-	Supported	Supported
127	AUSTRALIA-NER-MV480	Australia NER standard power grid	-	Supported	Supported
128	Ghana-MV480	Ghana medium-voltage power grid	-	Supported	Supported
129	Chile-PMGD	Chile PMGD power grid	-	Supported	Supported
130	Chile-PMGD-MV480	Chile PMGD power grid	-	Supported	Supported
131	TAIPOWER	Taiwan Power low-voltage power grid	-	Supported	Supported

 Copyright © Huawei Technologies Co., Ltd.

No.	Grid Code	Description	SUN2000-50KTL-ZHM3	SUN2000-50KTL-M3	SUN2000-50KTL-BRM3
132	TAIPOWER-MV480	Taiwan Power medium-voltage power grid (480 V)	-	Supported	Supported
133	OMAN	Oman low-voltage power grid	-	Supported	Supported
134	OMAN-MV480	Oman medium-voltage power grid	-	Supported	Supported
135	KUWAIT	Kuwait low-voltage power grid	-	Supported	Supported
136	KUWAIT-MV480	Kuwait medium-voltage power grid	-	Supported	Supported
137	BANGLADESH	Bangladesh low-voltage power grid	-	Supported	Supported
138	BANGLADESH-MV480	Bangladesh medium-voltage power grid	-	Supported	Supported
139	Chile-Net_Billing	Chile Net Billing power grid	-	Supported	Supported
140	BAHRAIN	Bahrain low-voltage power grid	-	Supported	Supported
141	BAHRAIN-MV480	Bahrain medium-voltage power grid	-	Supported	Supported
142	Fuel_Engine_Grid	Genset hybrid power grid	-	Supported	Supported
143	Fuel-Engine-Grid-60Hz	Genset hybrid power grid	-	Supported	Supported
144	ARGENTINA	Argentina power grid	-	Supported	Supported

 Copyright © Huawei Technologies Co., Ltd.

No.	Grid Code	Description	SUN2000-50KTL-ZHM3	SUN2000-50KTL-M3	SUN2000-50KTL-BRM3
145	Mauritius	Mauritius power grid	-	Supported	Supported
146	Mauritius-MV480	Mauritius medium-voltage power grid	-	Supported	Supported
147	EN50438-SE	Sweden low-voltage power grid	-	Supported	Supported
148	Austria	Austria power grid	-	Supported	Supported
149	Austria-MV480	Austria medium-voltage power grid	-	Supported	Supported
150	G99-TYPEA-LV	UK G99-TYPEA-LV power grid	-	Supported	Supported
151	G99-TYPEB-LV	UK G99-TYPEB-LV power grid	-	Supported	Supported
152	G99-TYPEB-HV	UK G99-TYPEB-HV power grid	-	Supported	Supported
153	G99-TYPEB-HV-MV480	UK G99_TypeB_HV medium-voltage power grid	-	Supported	Supported
154	G99-TYPEA-HV	UK G99-TYPEA-HV power grid	-	Supported	Supported
155	AS4777-WP	Australia power grid	-	Supported	Supported
156	CEA	India CEA low-voltage power grid	-	Supported	Supported
157	CEA-MV480	India CEA medium-voltage power grid	-	Supported	Supported

 Copyright © Huawei Technologies Co., Ltd.

No.	Grid Code	Description	SUN2000-50KTL-ZHM3	SUN2000-50KTL-M3	SUN2000-50KTL-BRM3
158	HONGKONG	Hong Kong low-voltage power grid	-	Supported	Supported
159	HONGKONG-MV480	Hong Kong medium-voltage power grid	-	Supported	Supported
160	AS4777_ACT	Australia power grid	-	Supported	Supported
161	AS4777_NSW_ESS	Australia power grid	-	Supported	Supported
162	AS4777_NSW_AG	Australia power grid	-	Supported	Supported
163	AS4777_QLD	Australia power grid	-	Supported	Supported
164	AS4777_SA	Australia power grid	-	Supported	Supported
165	AS4777_VIC	Australia power grid	-	Supported	Supported
166	DANMARK-EN50549-DK1-LV230	Denmark power grid	-	Supported	Supported
167	DANMARK-EN50549-DK2-LV230	Denmark power grid	-	Supported	Supported
168	SWITZERLAND-NA/EEA:2020-LV230	Switzerland power grid	-	Supported	Supported
169	AUSTRALIA-AS4777_A-LV230	Australia power grid	-	Supported	Supported
170	AUSTRALIA-AS4777_B-LV230	Australia power grid	-	Supported	Supported
171	AUSTRALIA-AS4777_C-LV230	Australia power grid	-	Supported	Supported
172	AUSTRALIA-AS4777_NZ-LV230	Australia power grid	-	Supported	Supported
173	FINLAND-EN50549-LV230	Finland power grid	-	Supported	Supported
174	ANRE-TYPEB	Romania power grid (type B)	-	Supported	Supported

 Copyright © Huawei Technologies Co., Ltd.

No.	Grid Code	Description	SUN2000-50KTL-ZHM3	SUN2000-50KTL-M3	SUN2000-50KTL-BRM3
175	ANRE-TYPEB-MV480	Romania power grid (type B)	-	Supported	Supported
176	FRANCE-EN50549-230	France FD C11-519-11	-	Supported	-
177	CHINA-GBT19964-480	China Region power grid	Supported	-	-
178	CZECH-EN50549-B1/B2-230	Czech Republic power grid (B1/B2)	-	Supported	-
179	SRI LANKA-230	Sri Lanka power grid	-	Supported	-
180	FRANCE-EN50549-519/12-230	France FD C11-519-12	-	Supported	-
Note a: The Czech Republic grid code requires that the inverter be subject to dispatching by the electric power company through DI. For details, see **E Setting Dry Contact Scheduling**.					

 Copyright © Huawei Technologies Co., Ltd.

B Device Commissioning

Step 1 Access the **Commission Device** screen.

Figure B-1 Method 1: before login (not connected to the Internet)

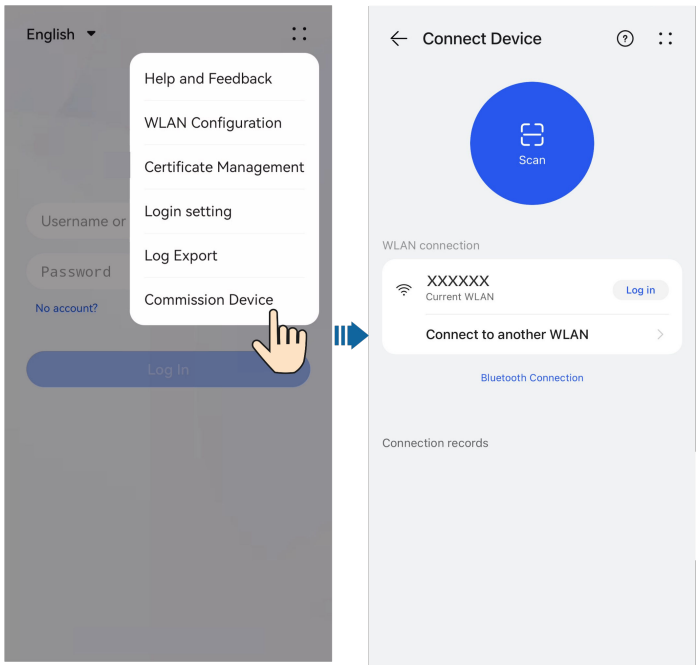

 Copyright © Huawei Technologies Co., Ltd.

Figure B-2 Method 2: after login (connected to the Internet)

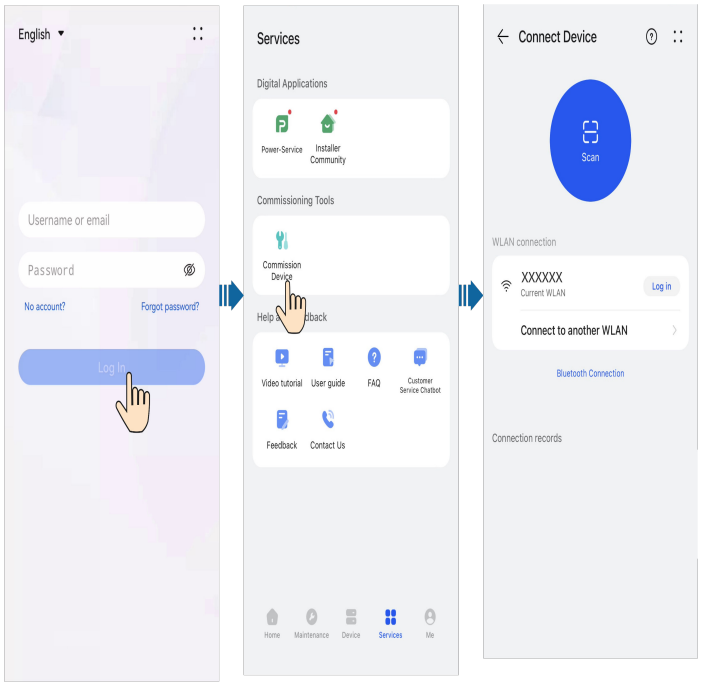

Step 2 Connect to the inverter WLAN, log in as **Installer**, and access the device commissioning screen.

NOTICE

- When connecting to the inverter directly from the mobile phone, keep the mobile phone visible within 3 meters of the inverter to ensure the communication quality between the app and inverter. The distance is for reference only and may vary with mobile phones and shielding conditions.
- When connecting to the inverter WLAN over a router, ensure that the mobile phone and inverter are in the WLAN coverage of the router and the inverter is connected to the router.
- Ensure that the router supports WLAN (IEEE 802.11 b/g/n, 2.4 GHz) and the WLAN signal covers the inverter.
- The WPA, WPA2, or WPA/WPA2 encryption mode is recommended for routers. The Enterprise mode is not supported (such as airport WLAN and other public hotspots that require authentication). WEP and WPA TKIP are not recommended because they have serious security vulnerabilities. If the access fails in WEP mode, log in to the router and change the encryption mode of the router to WPA2 or WPA/WPA2.

Copyright © Huawei Technologies Co., Ltd.

NOTE

- The initial password for connecting to the inverter WLAN can be obtained from the label on the side of the inverter.
- Set the password upon the first login. You are advised to change the password periodically. After changing the password, remember the new password to ensure account security. Your password might be stolen or cracked if it is left unchanged for extended periods. If a password is lost, devices cannot be accessed. In these cases, the Company shall not be liable for any loss caused to the plant.
- When you access the **Commission Device** screen of the inverter for the first time, you need to manually set the login password because the inverter does not have an initial login password.

----End

 Copyright © Huawei Technologies Co., Ltd.

C Built-in PID Recovery

NOTICE

Ensure that the inverter PE cable is securely connected. Otherwise, the built-in PID recovery function may be unavailable and electric shocks may occur.

Procedure

Step 1 On the home screen, choose **Settings** > **Feature parameters** and set related parameters.

Figure C-1 Setting PID suppression parameters

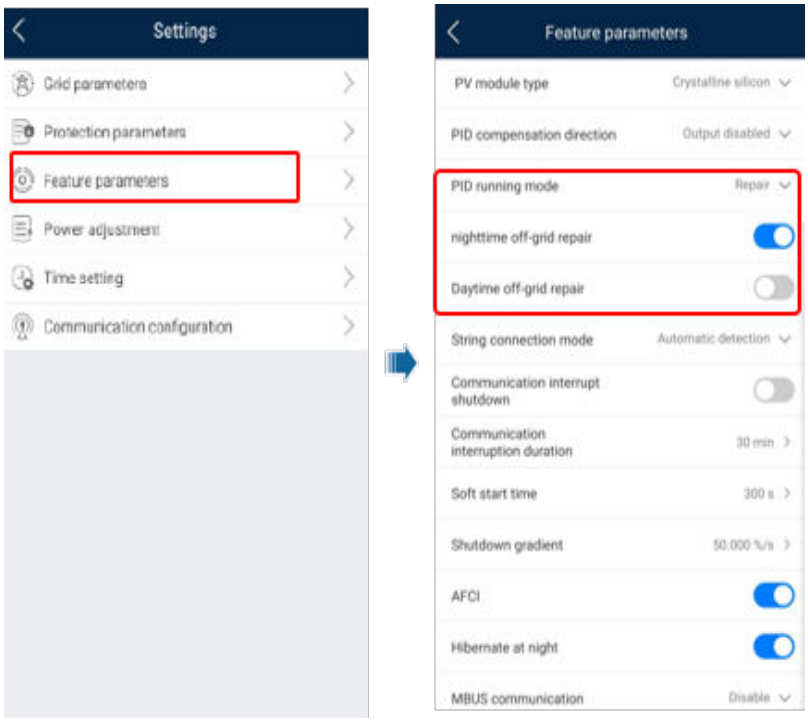

 Copyright © Huawei Technologies Co., Ltd.

NOTE

- Set **Built-in PID running mode** to **Repair** (**Disable** by default).
- Set **Nighttime off-grid repair** to . (This parameter is displayed when **Built-in PID running mode** is set to **Repair**.)

----End

D Resetting a Password

Step 1 Check that the AC and DC sides of the inverter are both powered on, and indicators and are steady green or blinking slowly for more than 3 minutes.

Step 2 Turn off the AC switch, set the DC SWITCH at the bottom of the inverter to OFF, and wait until all LED indicators on the inverter panel are off.

Step 3 Complete the following operations within 4 minutes:

1. Turn on the AC switch and wait for about 90s or until the inverter indicator blinks.
2. Turn off the AC switch and wait about 30s or until all LED indicators on the inverter panel are off.
3. Turn on the AC switch and wait about 30s or until all LED indicators on the inverter panel blink and then are off after about 30s.

Step 4 Wait until the three LED indicators on the inverter panel blink green fast and then blink red fast, which indicates that the password is restored.

Step 5 Reset the password within 10 minutes. (If no operation is performed within 10 minutes, all parameters of the inverter remain unchanged.)

1. Wait until the indicator blinks.
2. Connect to the app using the initial WLAN hotspot name (SSID) and initial password (PSW), which can be obtained from the label on the side of the inverter.
3. On the login screen, set a new password and log in to the app.

----End

NOTICE

You are advised to reset the password in the morning or at night when the solar irradiance is low.

 Copyright © Huawei Technologies Co., Ltd.

E Setting Dry Contact Scheduling

NOTICE

- In the inverter parallel connection scenario with Smart Dongle networking, log in to the SmartLogger to set parameters.
- In the inverter parallel connection scenario with Smart Dongle networking, log in to the inverter connected to the Smart Dongle to set parameters.

Function

This function applies to scenarios where the grid company performs remote scheduling through dedicated ripple control receivers. The grid company remotely sends a scheduling command (%) to the plant with a wireless transmitting apparatus. Then, the wireless receiving apparatus receives the scheduling command and converts it into a DI signal. The plant monitoring device controls the inverter to output the corresponding power.

Ensure that the inverter is correctly connected to the ripple control receiver when setting this function. (In Germany and some other European areas, the grid company uses the ripple control receiver to convert a power grid scheduling signal to a dry contact signal, and the power plant uses a dry contact to receive the signal.)

NOTE

When the functions of limited feed-in or zero feed-in and scheduling via the DI port are enabled at the same time, the system calculates the output power thresholds for both functions respectively, and then sends the smaller value to the inverter.

Procedure

1. **Connect to the inverter on the app** and log in to the local commissioning screen of the device.
2. Choose **Set** > **Power adjustment** > **Dry contact scheduling settings**.
3. Enable **Dry contact scheduling** and set related parameters as prompted.

 Copyright © Huawei Technologies Co., Ltd.

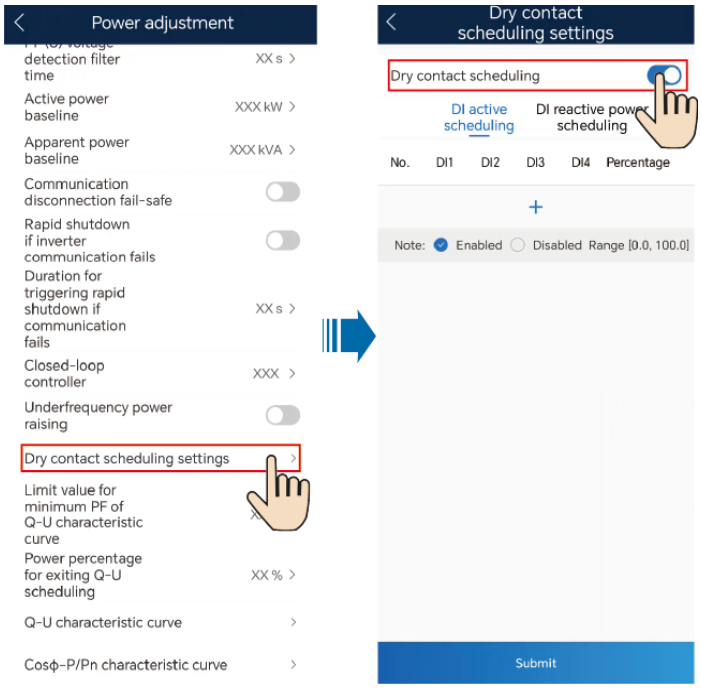

Parameter	Description
DI active scheduling	Sets the DI scheduling signals and the corresponding active output power percentage levels.
DI reactive power scheduling	Sets the DI scheduling signals and the corresponding reactive output power percentage levels.

NOTE

- The two scheduling modes support 16 levels of percentages. The percentage levels of DI1–DI4 must differ from each other. Otherwise, an exception will occur during command parsing.
- If the actual input DI signal is inconsistent with the setting, an **Abnormal DI Instruction** alarm will be generated.

Copyright © Huawei Technologies Co., Ltd.

F Setting RCD Parameters

Function

A residual current device (RCD) detects residual current (that is, leakage current of an electrical system to ground, including the residual current of an inverter to the ground and the residual current of a PV module to the ground), and automatically disconnects the inverter from the power grid when residual current exceeds the preset threshold.

Procedure

1. **Connect to the inverter on the app** and log in to the local commissioning screen of the device.
2. Choose **Set** > **Feature parameters**. Set the parameters **RCD enhancing** and **Current Threshold for Triggering RCD Protection** as required.

Parameter	Description
Current Threshold for Triggering RCD Protection	Sets the residual current threshold for triggering RCD protection. If the residual current of the electrical system to ground is greater than the current threshold for triggering RCD protection, the inverter shuts down due to RCD protection. **NOTICE** • If the current threshold for triggering RCD protection is set to a smaller value, the inverter is more likely to be shut down due to RCD protection. Exercise caution when setting this parameter. • Adjusting the current threshold for triggering RCD protection may cause the inverter to frequently trigger the protection mechanism. In this case, you can increase the threshold to disable the protection mechanism. Exercise caution when setting this parameter. If you have any questions, contact the vendor or manufacturer.

 Copyright © Huawei Technologies Co., Ltd.

Parameter	Description
RCD enhancing	Enables or disables the RCD enhancement function. ● **Enable**: enables the RCD enhancement function. If the RCD enhancement function is enabled, the residual current of the inverter will decrease. You are advised to enable this function if an AC switch with a residual current detection function is installed outside the inverter or the inverter operates in a humid environment (for example, on rainy days) and the inverter frequently triggers RCD protection. ● **Disabled**: disables the RCD enhancement function. **NOTICE** Enabling the RCD enhancement function may cause power derating of the inverter.

 Copyright © Huawei Technologies Co., Ltd.

G AFCI

Function

If PV modules or cables are incorrectly connected or damaged, electric arcs may be generated, which may cause fire. Huawei inverters provide unique arc fault detection in compliance with UL 1699B-2018 to ensure the safety of users' lives and property.

This function is enabled by default. The inverter automatically detects arc faults. To disable this function, log in to the app, access the **Device commissioning** screen, choose **Settings** > **Feature parameters**, and disable **AFCI**.

NOTE

The AFCI function works only with Huawei optimizers or ordinary PV modules when the inverter is connected to the grid, but does not support third-party optimizers or intelligent PV modules.

Clearing Alarms

The AFCI function involves the **DC arc fault** alarm.

The inverter has the AFCI alarm automatic clearance mechanism. If an alarm is triggered for less than five times within 24 hours, the inverter automatically clears the alarm. If the alarm is triggered for five times or more within 24 hours, the inverter locks for protection. You need to manually clear the alarm on the inverter so that it can work properly.

You can manually clear the alarm as follows:

- **Method 1**: App

  Log in to the app and choose **Services** > **Device commissioning**. On the **Device commissioning** screen, connect and log in to the inverter that has generated the AFCI alarm, tap **Alarm management**, and tap **Delete** on the right of the **DC arc fault** alarm to clear the alarm.

 Copyright © Huawei Technologies Co., Ltd.

Figure G-1 Alarm management

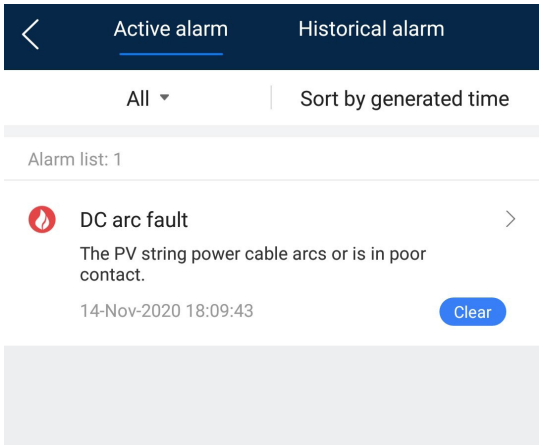

- **Method 2**: Management system

  Log in to the management system using a non-owner account, choose **Monitoring** > **Details**, click **DC Arc Fault Clearance**, and click **OK**.

Figure G-2 Clearing alarms

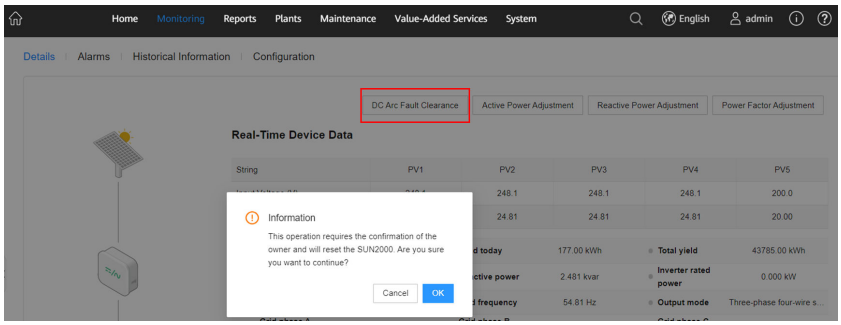

Log in using the owner account with plant management rights. Click the plant name on the **Home** page to access the plant page, and click **OK** as prompted to clear the alarm.

H Rapid Shutdown

If optimizers are configured for all PV modules connected to the inverter, the PV system can perform a rapid shutdown to decrease the output voltage to below 30 V within 30s. The rapid shutdown function is not supported if optimizers are configured for some PV modules.

Perform the following steps to trigger a rapid shutdown:

- Method 1 (recommended): Turn off the AC switch between the inverter and the power grid (disconnect the voltages of all PV strings connected to the inverter under the AC switch).
- Method 2: Set the **DC SWITCH** of the inverter to **OFF** to trigger a rapid shutdown. The inverter shuts down immediately. (Turning off all external switches on the DC side of an inverter can trigger a rapid shutdown, and only the PV strings connected to the inverter are de-energized. Turning off only some external switches cannot trigger a rapid shutdown, and the PV strings may be energized.)
- Method 3: To use the DI rapid shutdown function, connect the switch to DIN5 (pin 15) and GND (pin 13) at the communications terminal of the inverter. The switch shall be closed by default. When the switch is opened, rapid shutdown is triggered. The distance between the switch and the farthest inverter must be less than or equal to 10 m.

  NOTE

  Log in to the local commissioning screen as **Installer**, choose **Set** > **Feature parameters** > **Dry contact function**, and set **Dry contact function** to **DI rapid shutdown**.

- Method 4: If **AFCI** is set to **Enable**, the inverter automatically performs arc fault detection and triggers a rapid shutdown when AFCI lock protection is implemented.

  NOTE

  Log in to the local commissioning screen as **Installer**, choose **Set** > **Feature parameters**, and set **AFCI** to **Enable**.

 Copyright © Huawei Technologies Co., Ltd.

I NS Protection

Connecting NS Protection Signal Cables to Inverters

NOTE

- The NS protection function applies to areas that comply with the VDE 4105 standard.
- To use the NS protection function, connect the switch to DIN5 (pin 15) and GND (pin 13) at the communications terminal of the inverter. The switch shall be closed by default. When the switch is opened, NS protection is triggered.
- The cable connection method for a single inverter is the same as that for cascaded inverters. For a single inverter, connect GND and DIN5 to the same cable.
- Log in to the local commissioning screen as **Installer**, choose **Set** > **Feature parameters** > **Dry contact function**, and set the dry contact function to **NS protection**. To enable NS protection for multiple inverters, set **Dry contact function** to **NS protection** for each inverter.
- DI rapid shutdown and NS protection use the same DIN5 (pin 15) and GND (pin 13). Therefore, you can use only either of the functions.

Figure I-1 Connecting cascaded inverters to the NS protection switch

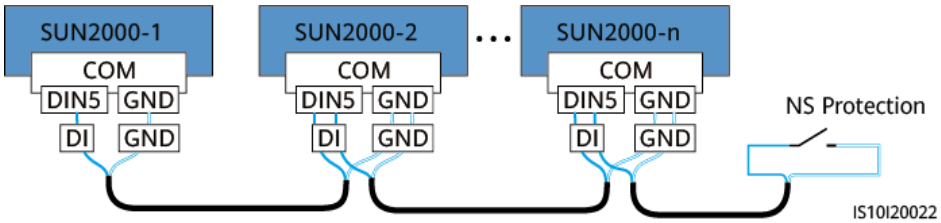

Copyright © Huawei Technologies Co., Ltd.

J Smart I-V Curve Diagnosis

For details, see the Smart I-V Curve Diagnosis user manual.

 Copyright © Huawei Technologies Co., Ltd.

K Locating Insulation Resistance Faults

If the ground impedance of a PV string connected to the inverter is too low, the inverter generates a **Low insulation resistance** alarm.

The possible causes are as follows:

- A short circuit has occurred between the PV array and the ground.
- The ambient air of the PV array is damp and the insulation between the PV array and the ground is poor.

After the **Low insulation resistance** alarm is reported by the inverter, insulation resistance fault location is automatically triggered. If the fault location is successful, the location information is displayed on the **Alarm details** screen of the **Low insulation resistance** alarm on the app.

Log in to the app, choose **Alarm** > **Active alarm**, select **Low insulation resistance** to enter the **Alarm details** screen.

Figure K-1 Alarm details

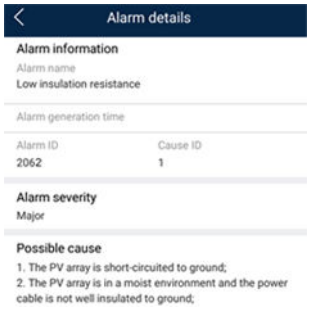

NOTE

- The positive and negative terminals of a PV string are respectively connected to the PV+ and PV– terminals of the inverter. The PV– terminal represents a possibility of 0% for the short-circuit position and the PV+ terminal represents a possibility of 100% for the short-circuit position. Other percentages indicate that the fault occurs on a PV module or cable in the PV string.
- Possible fault position = Total number of PV modules in a PV string x Percentage of possible short-circuit positions. For example, if a PV string consists of 14 PV modules and the percentage of the possible short-circuit position is 34%, the possible fault position is 4.76 (14 x 34%), indicating that the fault is located near PV module 4, including the previous and the next PV modules and the cables. The inverter has a detection precision of ±1 PV module.
- The possible faulty PV string MPPT1 corresponds to PV1 and PV2, and the possible faulty PV string MPPT2 corresponds to PV3 and PV4. The fault can be located only to the MPPT level. Perform the following steps to connect the PV strings corresponding to the faulty MPPT to the inverter one by one to further locate and rectify the fault.
- When a non-short-circuit fault occurs, the possible short-circuit percentage is not displayed. If the insulation resistance is greater than 0.001 MΩ, the fault is not related to short circuit. Check all PV modules in the faulty PV string one by one to locate and rectify the fault.

Figure K-2 Percentage of short-circuit positions

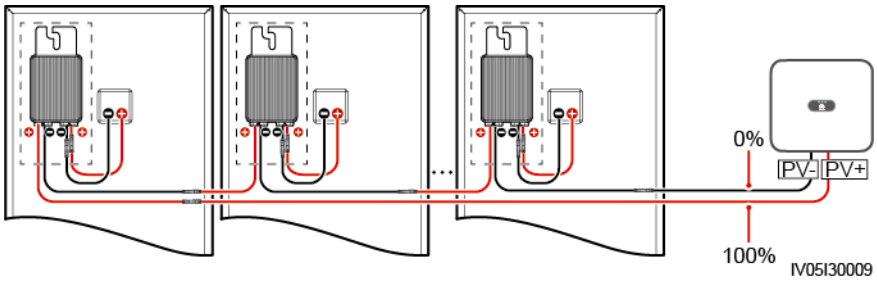

Procedure

NOTICE

If the irradiance or the PV string voltage is too high, the insulation resistance fault location may fail. In this case, the fault location status on the **Alarm details** screen is **Conditions not met**. Perform the following steps to connect PV strings to the inverter one by one to locate the fault. If the system is not configured with any optimizer, skip the corresponding optimizer operations.

Step 1 Ensure that the AC connections are normal. Log in to the app, choose **Maintenance** > **Inverter ON/OFF** on the home screen, and send a shutdown command. Set **DC SWITCH** to **OFF**.

Step 2 Connect one PV string to the inverter, and set **DC SWITCH** to **ON**. If the inverter status is **Shutdown: Command**, log in to the app, choose **Maintenance** > **Inverter ON/OFF** on the home screen, and send a startup command.

Step 3 Choose **Alarm** on the home screen, enter the **Active alarm** screen, and check whether a **Low insulation resistance** alarm is reported.

 Copyright © Huawei Technologies Co., Ltd.

- If no **Low insulation resistance** alarm is reported 1 minute after the DC side is powered on, choose **Maintenance** > **Inverter ON/OFF** on the home screen, and send a shutdown command. Set **DC SWITCH** to **OFF**. Go to **Step 2** and check rest of the PV strings one by one.
- If a **Low insulation resistance** alarm is reported 1 minute after the DC side is powered on, check the percentage of possible short-circuit positions on the **Alarm details** screen and calculate the location of the possible faulty PV module based on the percentage. Then go to **Step 4**.

Step 4 Log in to the app, choose **Maintenance** > **Inverter ON/OFF** on the home screen, and send a shutdown command. Set **DC SWITCH** to **OFF**. Check whether the connectors or DC power cables between the optimizer and PV module, between adjacent PV modules, or between adjacent optimizers on the possible fault position are damaged.

- If yes, replace the damaged connectors or DC power cables, and then set **DC SWITCH** to **ON**. If the inverter status is **Shutdown: Command**, choose **Maintenance** > **Inverter ON/OFF**, and send a startup command. View alarm information.
  - If no **Low insulation resistance** alarm is reported 1 minute after the DC side is powered on, troubleshoot the insulation resistance fault of the PV string. Log in to the app, choose **Maintenance** > **Inverter ON/OFF** on the home screen, and send a shutdown command. Set **DC SWITCH** to **OFF**. Go to **Step 2** and check rest of the PV strings one by one. Then, go to **Step 8**.
  - If the DC side is powered on 1 minute later, the **Low insulation resistance** alarm is still reported. Log in to the app, choose **Maintenance** > **Inverter ON/OFF** on the home screen, and send a shutdown command. Set **DC SWITCH** to **OFF** and go to **Step 5**.
- If no, go to **Step 5**.

Step 5 Disconnect the possible faulty PV module and the paired optimizer from the PV string, and use a DC extension cable with an MC4 connector to connect the PV module or optimizer adjacent to the possible faulty PV module. Set **DC SWITCH** to **ON**. If the inverter status is **Shutdown: Command**, choose **Maintenance** > **Inverter ON/OFF** on the home screen, and send a startup command. View alarm information.

- If no **Low insulation resistance** alarm is reported 1 minute after the DC side is powered on, the fault occurred on the disconnected PV module and optimizer. Choose **Maintenance** > **Inverter ON/OFF**, send a shutdown command, and set **DC SWITCH** to **OFF**. Go to **Step 7**.
- If the **Low insulation resistance** alarm is reported 1 minute after the DC side is powered on, the fault did not occur on the disconnected PV module and optimizer. Go to **Step 6**.

Step 6 Log in to the app, choose **Maintenance** > **Inverter ON/OFF** on the home screen, and send a shutdown command. Set **DC SWITCH** to **OFF**, reconnect the disconnected PV module and optimizer, and repeat **Step 5** to check the PV modules and optimizers adjacent to the possible fault location.

Step 7 Determine the position of the ground insulation fault:

- Disconnect the possible faulty PV module from the optimizer.

 Copyright © Huawei Technologies Co., Ltd.

- Connect the possible faulty optimizer to the PV string.
- Set **DC SWITCH** to **ON**. If the inverter status is **Shutdown: Command**, choose **Maintenance** > **Inverter ON/OFF**, and send a startup command. View alarm information.
  - If no **Low insulation resistance** alarm is reported 1 minute after the DC side is powered on, the fault is on the possible faulty PV module.
  - If the **Low insulation resistance** alarm is reported 1 minute after the DC side is powered on, the fault is on the possible faulty optimizer.
- Log in to the app, choose **Maintenance** > **Inverter ON/OFF** on the home screen, and send a shutdown command. Set **DC SWITCH** to **OFF**, replace the faulty component, and complete troubleshooting the insulation resistance fault. Go to **Step 2** and check rest of the PV strings one by one. Then, go to **Step 8**.

Step 8 Set **DC SWITCH** to **ON**. If the inverter status is **Shutdown: Command**, choose **Maintenance** > **Inverter ON/OFF**, and send a startup command.

----End

 Copyright © Huawei Technologies Co., Ltd.

L Connecting to a Device on the App (the Device Supports WLAN)

NOTICE

- When directly connecting your phone to a device, ensure that your phone is within the WLAN coverage of the device.

Step 1 Start device commissioning.

Figure L-1 Method 1: mobile phone connected to the Internet

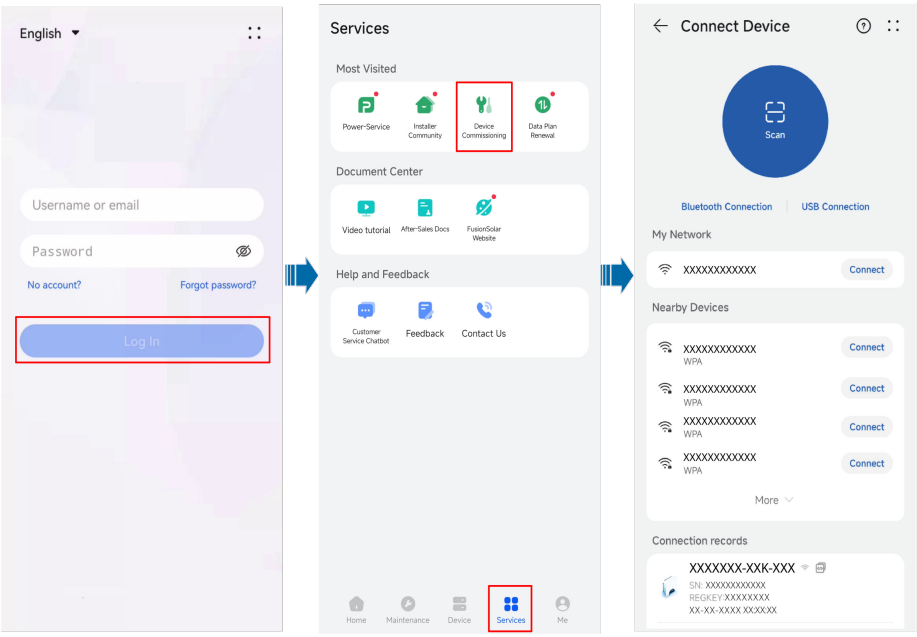

 Copyright © Huawei Technologies Co., Ltd.

Figure L-2 Method 2: mobile phone not connected to the Internet

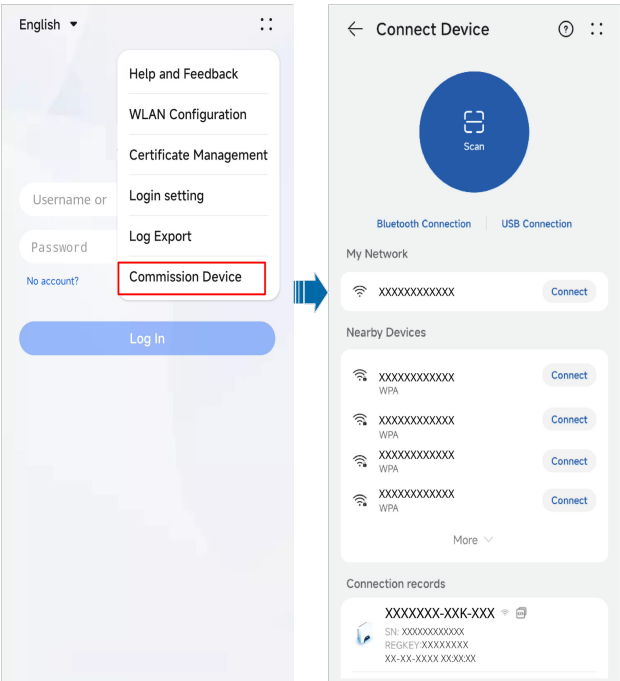

Step 2 Connect to the device WLAN.

Tap **Scan**. On the scanning screen, align the QR code of the device WLAN with the scanning box to automatically scan and connect to the device.

NOTE

- The WLAN name of a device consists of "Device name-Device SN." (The last six digits of the WLAN names of some devices are the same as the last six digits of the device SNs.)
- For the first connection, log in with the initial password. You can obtain the initial WLAN password from the label on the device.
- Ensure account security by changing the password periodically. Your password might be stolen or cracked if it is left unchanged for extended periods. If a password is lost, the device cannot be accessed. In these cases, the Company shall not be liable for any loss.
- If the login screen is not displayed after you scan the QR code, check whether your phone is correctly connected to the device WLAN. If not, manually select and connect to the WLAN.
- If **This WLAN network has no Internet access. Connect anyway?** message is displayed when you connect to the built-in WLAN, tap **CONNECT**. Otherwise, you cannot log in to the system. The actual UI and messages may vary with mobile phones.

Step 3 Log in to the device commissioning screen as **Installer**.

 Copyright © Huawei Technologies Co., Ltd.

NOTICE

- After completing the deployment settings, the installer shall remind the owner to access the local commissioning screen of the device and set the login password of the owner account as prompted.
- Ensure account security by changing the password periodically. Your password might be stolen or cracked if it is left unchanged for extended periods. If a password is lost, the device cannot be accessed. In these cases, the Company shall not be liable for any loss.

----End

Copyright © Huawei Technologies Co., Ltd.

M Contact Information

If you have any questions about this product, please contact us.

https://digitalpower.huawei.com

Path: **About Us** > **Contact Us** > **Service Hotlines**

To ensure faster and better services, we kindly request your assistance in providing the following information:

- Model
- Serial number (SN)
- Software version
- Alarm ID or name
- Brief description of the fault symptom

 Copyright © Huawei Technologies Co., Ltd.

NOTE

EU Representative Information: Huawei Technologies Hungary Kft.
Add.: HU-1133 Budapest, Váci út 116-118., 1. Building, 6. floor.
Email: hungary.reception@huawei.com

N Digital Power Customer Service

https://digitalpower.huawei.com/robotchat/

 Copyright © Huawei Technologies Co., Ltd.

O Acronyms and Abbreviations

A	
AFCI	arc-fault circuit interrupter
L	
LED	light emitting diode
M	
MBUS	monitoring bus
MPP	maximum power point
MPPT	maximum power point tracking
P	
PE	protective earthing
PID	potential induced degradation
PV	photovoltaic
R	
RCD	residual current device

 Copyright © Huawei Technologies Co., Ltd.